NR/ NDR series

3,000lb - 4,000lb

Yale
People. Products. Productivity.

Narrow Aisle Reach Trucks

SPEC SHEET

Models: NR035DC, NR040DC, NDR030DC

TRUCK DIMENSIONS NR035-040DC

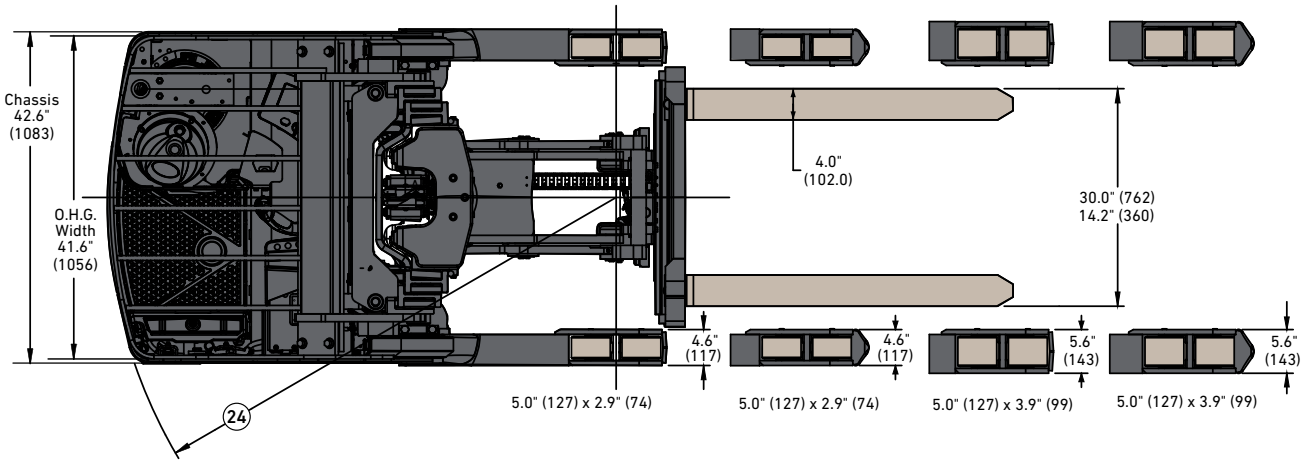

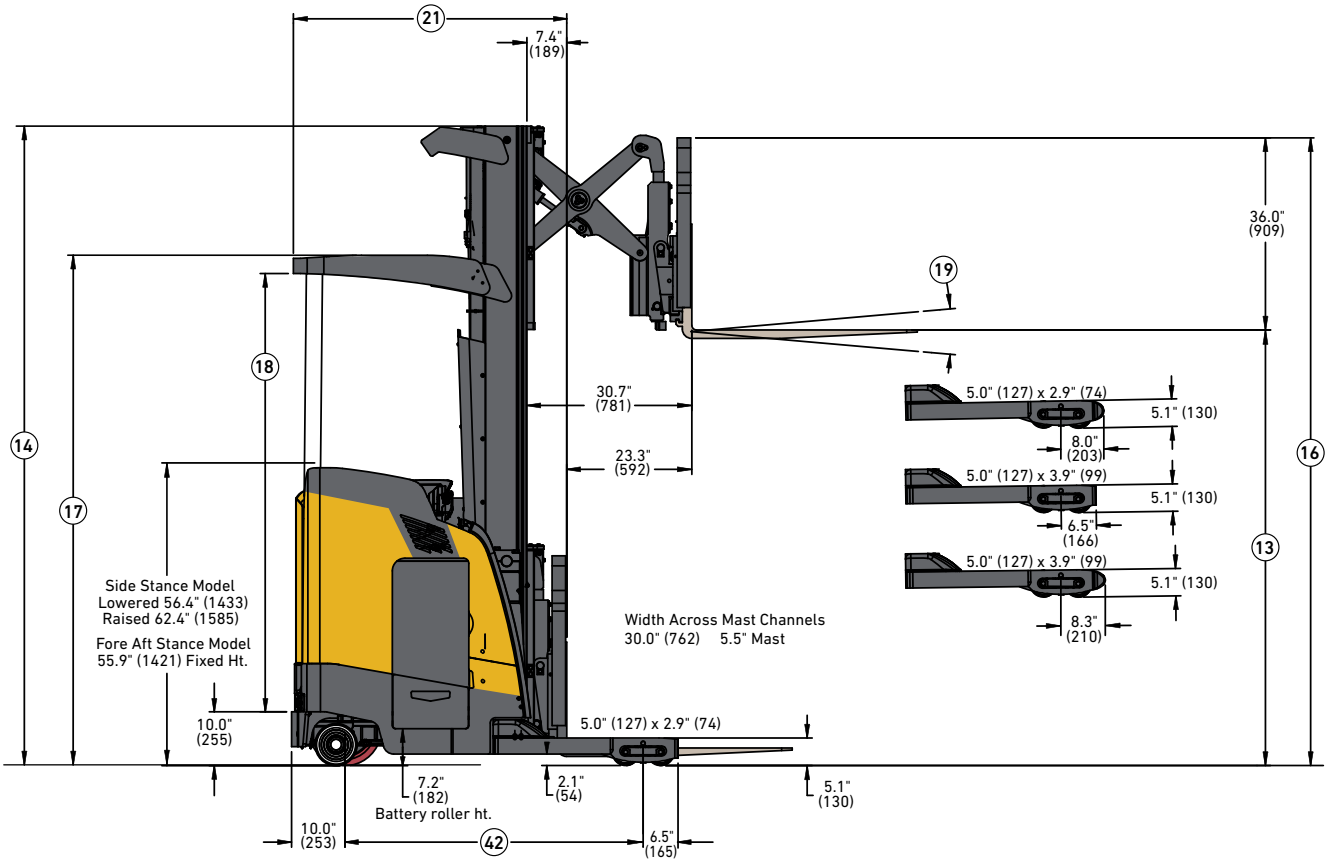

Circled truck dimensions correspond to the line numbers in the General Specifications chart. Dimensions are listed in inches (millimeters).

GENERAL SPECIFICATIONS NR035-040DC

GENERAL	1	Manufacturer name		Yale		Yale	
	2	Model		NR035DC		NR040DC	
	3	Wheel base designation *		SWB		SWB	
	4	Rated capacity	lb (kg)	3500 (1588)		4000 (1814)	
	5	Load center, distance	in (mm)	24 (610)		24 (610)	
	6	Power type - electric, diesel, LPG		Electric - 24V	Electric - 36V	Electric - 24V	Electric - 36V
WT.	7	Operator type		Stand		Stand	
	8	Tire type - load/caster/drive		Poly/Poly/Poly		Poly/Poly/Poly	
	9	Wheels, number load/drive (x=driven)		4 / 2 (1x)		4 / 2 (1x)	
	10	Truck weight, without battery (approximate)	lb	5340		5360	
DIMENSIONS	12	Axle loading with assembly retracted ** (front/rear)	lb	6773/4160		7373/4082	
	13	Height, standard lift (TOF)	in (mm)	See mast table			
	14	Height, standard mast lowered (OALH)	in (mm)				
	15	Height, freelift (TOF)	in (mm)				
	16	Height, standard mast extended w/LBR	in (mm)				
	17	Height, top of OHG	in (mm)				
	18	Height, operator clearance	in (mm)				
	19	Mast tilt angle, forward/back	degrees	3 / 4		3 / 4	
	20	Forks, standard (length x width x thickness)	in	1.60 x 3.9 x 42		1.80 x 3.9 x 42	
	21	Headlength to face of forks - all battery compartments ***	in (mm)	See mast table		See mast table	
	22	Outrigger ID	in	34"- 49" (1" increments)		34"- 49" (1" increments)	
	23	Battery compartment size, 12.5" battery compartment - (LxWxH)	in	39.0 x 12.5 x 31.5		39.0 x 12.5 x 31.5	
		Battery compartment size, 14.25" battery compartment - (LxWxH)	in	39.0 x 14.25 x 31.5		39.0 x 14.25 x 31.5	
		Battery compartment size, 16.25" battery compartment - (LxWxH)	in	39.0 x 16.25 x 31.5		39.0 x 16.25 x 31.5	
	24	Turning radius - minimum outside, 12.5" battery compartment	in	65.67		65.67	
		Turning radius - minimum outside, 14.25" battery compartment	in	65.67		65.67	
		Turning radius - minimum outside, 16.25" battery compartment	in	67.60		67.60	
	25	Aisle width - zero clearance - right angle stack	see chart	See "RAS" table		See "RAS" table	
PERFORMANCE	26	Stability - comply with ANSI		YES		YES	
		Travel speed					
	28	Rearward (chassis first) - empty/RL	mph	6.5/6.5		6.5/6.5	
	29	Forward (forks first) - empty/RL	mph	6.5/6.0 †		6.5/6.0 †	
		Lift Speed					
	31	Empty	ft/min	66	77	66	77
	32	2,000 lb.	ft/min	50	65	50	63
	33	3,000 lb.	ft/min	40	60	43	57
	34	3,500 lb.	ft/min	37	56	40	53
	35	4,000 lb.	ft/min	N/A		35	50
	36	4,500 lb.	ft/min	N/A		N/A	
	37	Lowering speeds, empty	ft/min	85		85	
	38	Lowering speeds, RL	ft/min	85		85	
WHEELS & TIRES	39	Size - front load wheels, standard		5 x 3.9		5 x 3.9	
	41	Size, standard - drive tire/dual casters		13.5 x 5.5 / 7.9 x 2.2		13.5 x 5.5 / 7.9 x 2.2	
	42	Wheelbase - 12.5" battery ccompartment	in	55.6		55.6	
		Wheelbase - 14.25" battery compartment	in	55.6		55.6	
		Wheelbase - 16.25" battery compartment	in	57.6		57.6	
	43	Brakes, service/parking (method of control)		Foot / auto		Foot / auto	
	44	Brake, service/parking (method of operation)		Regen / spring apply (electric release)		Regen / spring apply (electric release)	
ELECTRIC	45	Battery type		Lead acid (std), Li-Ion (opt), fuel cell (opt)		Lead acid (std), Li-Ion (opt), fuel cell (opt)	
	46	Traction motor rating (60 minute rating)	hp (kw)	8 (6)	8.9 (6.6)	8 (6)	8.9 (6.6)
	47	Hoist motor rating (5 minute rating)	hp (kw)	11.1 (8.3)	17.7 (13.2)	11.1 (8.3)	17.7 (13.2)
	48	Traction motor control method		Transistor		Transistor	
	49	Hoist motor control method		Transistor		Transistor	
	50	Number of speeds		Infinitely variable		Infinitely variable	

SWB = Short Wheel Base; LWB = Long Wheel Base
RL = rated load

* *Short or Long Wheelbase is for Double Reach Only. LWB for Double Reach Masts 278" and below*
** *Static with Rated Load and Max. Wt. Battery*
*** *Includes Integral Sideshift, Subtract 1" for Without Sideshift*
† *Travel Speed is reduced to 6.0mph for loads 2500lbs and greater in the forks leading direction.*

NOTE: Performance specifications / ratings are for truck equipped as described under Standard Features.

TRUCK DIMENSIONS NDR030DC

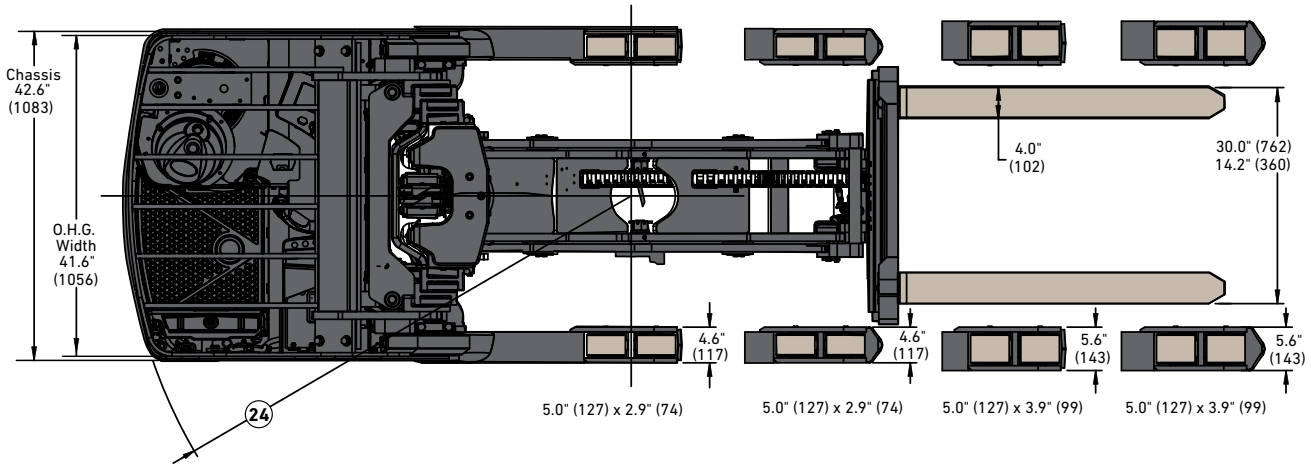

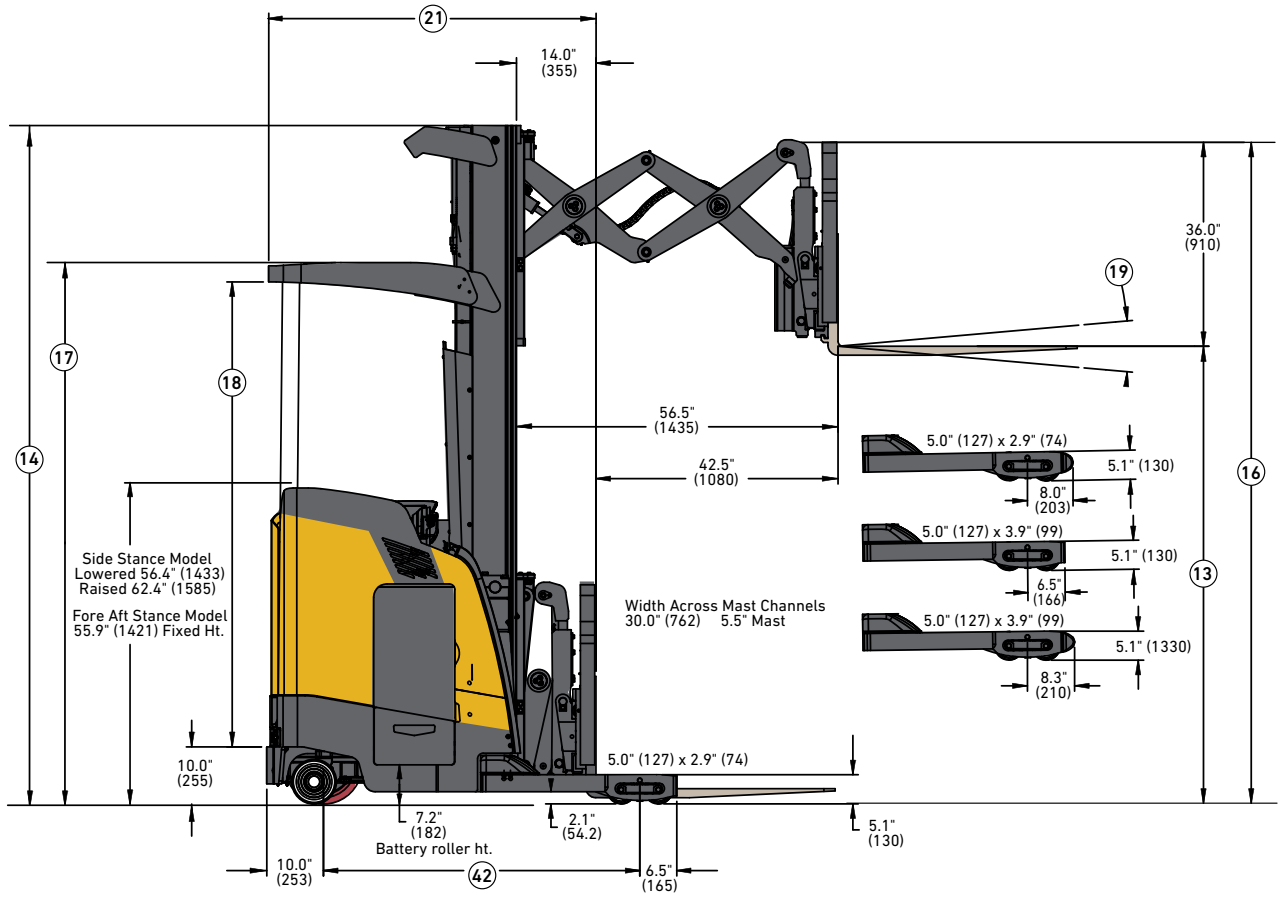

Circled truck dimensions correspond to the line numbers in the General Specifications chart. Dimensions are listed in inches (millimeters).

GENERAL SPECIFICATIONS NDR030DC

GENERAL	1	Manufacturer name		Yale	
	2	Model		NDR030DC	
	3	Wheel base designation *		LWB	
	4	Rated capacity	lb (kg)	3000 (1361)	
	5	Load center, distance	in (mm)	24 (610)	
	6	Power type - electric, diesel, LPG		Electric - 24V	Electric - 36V
WT.	7	Operator type		Stand	
	8	Tire type - load/caster/drive		Poly/Poly/Poly	
	9	Wheels, number load/drive (x=driven)		4 / 2 (1x)	
	10	Truck weight, without battery (approximate)	lb	5590	
DIMENSIONS	12	Axle loading with assembly retracted ** (front/rear)	lb	6353/4330	
	13	Height, standard lift (TOF)	in (mm)	See mast table	
	14	Height, standard mast lowered (OALH)	in (mm)		
	15	Height, freelift (TOF)	in (mm)		
	16	Height, standard mast extended w/LBR	in (mm)		
	17	Height, top of OHG	in (mm)		
	18	Height, operator clearance	in (mm)		
	19	Mast tilt angle, forward/back	degrees	3 / 4	
	20	Forks, standard (length x width x thickness)	in	1.60 x 3.9 x 42	
	21	Headlength to face of forks - all battery compartments ***	in (mm)	See mast table	
	22	Outrigger ID	in	34"- 49" (1" increments)	
	23	Battery compartment size, 12.5" battery compartment - (LxWxH)	in	N/A	
		Battery compartment size, 14.25" battery compartment - (LxWxH)	in	39.0 x 14.25 x 31.5	
		Battery compartment size, 16.25" battery compartment - (LxWxH)	in	39.0 x 16.25 x 31.5	
	24	Turning radius - minimum outside, 12.5" battery compartment	in	N/A	
		Turning radius - minimum outside, 14.25" battery compartment	in	70.47	
		Turning radius - minimum outside, 16.25" battery compartment	in	72.40	
	25	Aisle width - zero clearance - right angle stack	see chart	See "RAS" table	
PERFORMANCE	26	Stability - comply with ANSI		YES	
		Travel speed			
	28	Rearward (chassis first) - empty/RL	mph	6.5/6.5	
	29	Forward (forks first) - empty/RL	mph	6.5/6.0 †	
		Lift speed			
	31	Empty	ft/min	66	77
	32	2,000 lb.	ft/min	52	65
	33	3,000 lb.	ft/min	45	57
	34	3,500 lb.	ft/min	N/A	
	35	4,000 lb.	ft/min	N/A	
	36	4,500 lb.	ft/min	N/A	
	37	Lowering speeds, empty	ft/min	85	
	38	Lowering speeds, RL	ft/min	85	
WHEELS & TIRES	39	Size - front load wheels, standard		5 x 2.9	
	41	Size, standard - drive tire/dual casters		13.5 x 5.5 / 7.9 x 2.2	
	42	Wheelbase - 12.5" battery compartment	in	N/A	
		Wheelbase - 14.25" battery compartment	in	60.6	
		Wheelbase - 16.25" battery compartment	in	62.6	
	43	Brakes, service/parking (method of control)		Foot / auto	
	44	Brake, service/parking (method of operation)		Regen / spring apply (electric release)	
ELECTRIC	45	Battery type		Lead acid (std), Li-Ion (opt), fuel cell (opt)	
	46	Traction motor rating (60 minute rating)	hp (kw)	8 (6)	8.9 (6.6)
	47	Hoist motor rating (5 minute rating)	hp (kw)	11.1 (8.3)	17.7 (13.2)
	48	Traction motor control method		Transistor	
	49	Hoist motor control method		Transistor	
	50	Number of speeds		Infinitely variable	

SWB = Short Wheel Base; LWB = Long Wheel Base
RL = rated load

* *Short or Long Wheelbase is for Double Reach Only. LWB for Double Reach Masts 278" and below*
** *Static with Rated Load and Max. Wt. Battery*
*** *Includes Integral Sideshift, Subtract 1" for Without Sideshift*
† *Travel Speed is reduced to 6.0mph for loads 2500lbs and greater in the forks leading direction.*

NOTE: Performance specifications / ratings are for truck equipped as described under Standard Features..

NR/NDR030-040DC MAST DIMENSIONS (5.5" STANDARD)

Overall Lowered Ht.	Max. Fork Height (TOF)	Free-Lift (TOF)	Overall Height (Mast Extended) Highest Point w/36" LBR	Overhead Guard Height to Top	Operator Clearance	Head Length (Length to Face of Forks)			
						12.5"	14.25"	16.25"	
in (mm)	in (mm)	in (mm)	in (mm)	in (mm)	in (mm)	Single Reach	Double Reach	Single Reach	Double Reach
3-Stage Full Free-Lift (FFL) Hi-Vis™ Mast									
87 (2210)	191 (4851)	48 (1219)	230 (5842)	87 (2212)	74.3 (1887)	52.16	57.83	54.21	59.88
91 (2311)	203 (5156)	52 (1321)	242 (6147)	91 (2314)	78.3 (1989)	52.16	57.83	54.21	59.88
95 (2413)	212 (5385)	56 (1422)	251 (6375)	95 (2416)	82.3 (2090)	52.16	57.83	54.21	59.88
101 (2565)	227 (5766)	62 (1575)	266 (6756)	95 (2416)	82.3 (2090)	52.16	57.83	54.21	59.88
107 (2718)	242 (6147)	68 (1727)	281 (7137)	95 (2416)	82.3 (2090)	52.16	57.83	54.21	59.88
110 (2794)	251 (6375)	71 (1803)	290 (7366)	95 (2416)	82.3 (2090)	52.16	57.83	54.21	59.88
119 (3023)	272 (6909)	80 (2032)	311 (7899)	95 (2416)	82.3 (2090)	52.16	57.83	54.21	59.88

BATTERY AND COMPARTMENT SPECIFICATIONS

Battery Specifications

Battery Compartment Size	Battery Voltage	Maximum 6 Hr Rate		Battery Compartment Dimensions						Battery Dimensions						Minimum Batt. Wt.	Maximum Batt. Wt.
				"X" Max.		"Y" Max.		"Z" Max.		"X" Max.		"Y" Max.		"Z" Max.			
		AH	KWH	in	(mm)	in	(mm)	in	(mm)	in	(mm)	in	(mm)	in	(mm)	lb (kg)	lb (kg)
12.50"	24	1085	25.4	39.0	990	12.5	318	31.5	800	38.8	985	12.25	311	31	788	1400 (635)	1900 (862)
14.25"	24	1240	29	39.0	990	14.25	362	31.5	800	38.8	985	14	356	31	788	1600 (726)	2100 (953)
14.25"	36	775	27.2	39.0	990	14.25	362	31.5	800	38.8	985	14	356	31	788	1600 (726)	2100 (953)
16.25"	24	1395	32.6	39.0	990	16.25	413	31.5	800	38.8	985	16	406	31	788	1850 (839)	2350 (1066)
16.25"	36	930	32.6	39.0	990	16.25	413	31.5	800	38.8	985	16	406	31	788	1850 (839)	2350 (1066)

Battery Connector: 24V - Red; 36V - Gray; Position "B", Lead Length 16"
Manufacturers Standard Cable Size Not to Exceed 4/0 AWG
Battery compartment is designed to accommodate standard wet cell batteries with fixed lifting eyes and no cover.
Contact Applications Engineering to verify compatibility/fit when using maintenance free, covered or non-standard batteries.

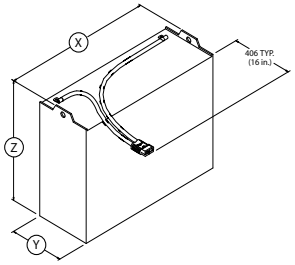

Right Angle Aisle Stacking

NR035-040DC

12.5" or 14.25" Battery Compartment and 42" ID

3 Stage - 4" Between Loads

Pallet Length (inches)	Pallet Width (inches)			
	36	40	44	48
36	85	85	85	85
40	87	87	86	86
44	92	91	91	90
48	96	96	95	95

Subtract 1" if without sideshift *Add 2" for 16.25" battery compartment*

NDR030DC

14.25" Battery Compartment and 42" ID

3 Stage - 6" Between Loads

Pallet Length (inches)	Pallet Width (inches)			
	36	40	44	48
36	87	86	86	86
40	91	90	90	89
44	96	95	95	94
48	100	100	99	99

Sideshift is standard on double reach *Add 2" for 16.25" battery compartment*

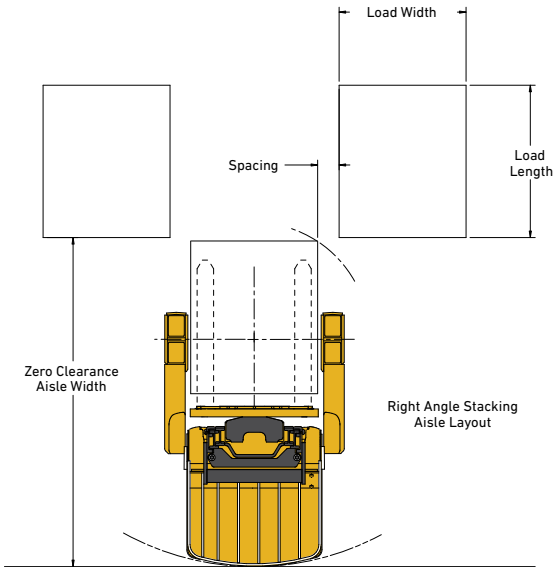

Note: These are "Zero Clearance" aisles and require an additional 6" to 12" to be added to provide for easier maneuvering.

FEATURES LIST

STANDARD FEATURES
Sidestance operator controls
Operator sensing system
Wire mesh mast guard
EZ Ride floor
Low profile anti-fatigue floormat
Automotive steering
Steer tiller position adjustment
24 Volt battery (includes 350 amp red battery connector)
91" / 203" / 52" – (5.5") 3 Stage full free lift mast
Single reach mast (24" extend) with 33.5" wide class II with integal sideshift (hook type carriage)
Double reach mast (42" extend) with 33.5" wide class II with integral sideshift (hook type carriage)
Forks: 1.8" x 3.9" (45 mm x 100 mm) 42"(1067 mm) – class II, hook type (standard on NR040DC)
Forks: 1.6" x 3.9" (40 mm x 100 mm) 42" (1067 mm) – class II, hook type (standard on NDR030DC and NR035DC)
5" x 3.9" Poly articulating tandem load wheels - high load compound (standard on NR035DC and NR040DC)
5" x 2.9" Poly articulating tandem load wheels - high load compound (standard on NDR030DC)
AC traction, lift / lower and steering
Low step height
Transistor controller with regenerative braking
4 Independent fully programmable performance modes
Programmable traction speed and acceleration
Electric power steering
Fully proportional lift/lower control
Poly drive tire – 13.5" x 5.5"
Dual articulating polyurethane caster wheels
Power disconnect
Key start
2 USB ports
36" High load backrest extension
Sealed battery rollers
Tilting carriage (3° fwd, 4° back)
Padded operator compartment
Rear post operator protection
Operator's overhead guard
Control handle with simultaneous hydraulic functions
5" Smart display: color touchscreen with:
– Clock
– Bar graphic battery discharge indicator and lift interrupt
– Hour meters: truck, traction, hoist pump, and secure
– Maintenance reminder
– Programmable performance mode selection
– User passwords and operator logs with history
– Steer wheel angle graphic indication
– Truck inspection check list
– Truck speed indication in MPH or KPH
Electronic horn
Static discharge strap
UL classification E
Operating manual
12 Month / unlimited hours full truck warranty
3 Years/ 6,000 hour powertrain warranty
Lifetime frame warranty

OPTIONAL FEATURES
Fore/aft stance operator controls
Reverse steering
Yale® Smart Ride Floor (full suspension floor)
Clear mast guard
Steered caster - SPED
Keyless start
7" Smart display: color touchscreen
Rotary joystick (opt – standard construction, standard – cooler/freezer)
36 Volt battery (includes 350 amp gray battery connector)
Battery stand
Battery puller
Battery gate interlock
Lithium ion ready
Fuel cell ready
Cooler/freezer construction (0° F to 120°F), includes rubber floormat
Various-sized load wheels with sealed bearings
Various drive tires
Tapered load wheel boxes
Lift limits
Single reach mast without integral sideshift for standard 33.5" wide carriage-7" total sideshift travel **
Various fork lengths
Various I.D. outriggers
Fork height display
48" High load backrest extension
Audible back-up and motion alarms
Visual amber strobe light
Blue LED spotlights
Operator LED desktop light
Dual LED headlights
Rear LED worklight
Operator overhead fan
Load weight display
Reduced travel speed with carriage extended
RF terminal bracket
RF Handheld scanner holder
12 Volt DC auxiliary power supply
Impact monitor
Wire mesh on top OHG
Parts manual
Rear operator compartment door * - SPED
Yale Vision

** Doors are intended to protect the operator from objects that may enter the operator's compartment but they may also slow the operator's egress in emergency situations. A review of the forklift's intended environment should be conducted before selecting a door as optional equipment.*

*** Sideshift includes 7" travel (3.5" each side). Sideshift travel will be reduced to 3" total (1.5" each side) when Outrigger ID is less than 39".*

About Yale®

Yale Materials Handling Corporation is one of the oldest manufacturers of lift trucks in the world. We've been in the business of lifting since 1875 and we apply that experience to help customers solve materials handling challenges. Our full line of lift trucks range in capacity from 2,000 to 36,000 pounds and are powered by internal combustion engines or electric options. Yale also offers robotic solutions, telemetry, fleet management, parts, financing and training. From traditional lift truck equipment to emerging technologies, our goal, every day, is to work with our nationwide dealer network to continually improve and provide the solutions you need, when and how you need them.

MATERIALS HANDLING FOR:

- 3PL
- Auto Parts Distribution
- Beverage
- Cold & Frozen Foods
- Food Distribution
- Food Processing
- Furniture & Furnishings
- Government
- Health & Pharma
- Home Centers
- Retail & E-Commerce

Yale Materials Handling Corporation
P.O. Box 7367
Greenville, NC 27835-7367
U.S.A.

www.yale.com

Yale, and PEOPLE. PRODUCTS. PRODUCTIVITY are trademarks of Hyster-Yale Group, Inc. is a registered copyright of Hyster-Yale Group, Inc. © Yale Materials Handling Corporation 2022. All rights reserved.

Trucks may be shown with optional equipment. Truck performance may be affected by the condition of the vehicle, how it is equipped and the application. Specifications are subject to change without notice. Consult your Yale® Dealer if any of the information shown is critical to your application.

CERTIFICATION: Yale lift trucks meet the design and construction requirements of B56.1-1969, per OSHA Section 1910.178(a)(2), and also comply with the B56.1 revision in effect at time of manufacture. Classified by Underwriters' Laboratories, Inc.

2360-2C 05/2022

2015YBC2SP001_E_EN-US_YR3_05/2022