INTEGRA METERING

AMFLO® MAG Pro
Electromagnetic flowmeter

Applications

Electromagnetic flowmeters are designed for measuring the flow of electrically conductive mediums. Applications can be found in the sectors district cooling, building automation and cooling water measurement.



Features

- No pressure loss
- Nominal sizes DN 25 - DN 1000
- Flanges DIN, ANSI or JIS
- Compact or remote version
- As option with OIML R49, MID, EN 1434 or PTB K7.2 type approval for water, heating or cooling

Benefits

- High accuracy
- Robust housing, suitable for rugged conditions
- Wide measurement range
- Maintenance-free, trouble-free

6-900-TD-EN-03

General Information

A complete device consists of a sensor and a relating converter. The calibration data is saved in the electronics of the converter. Converters for replacement can be ordered by serial number of the sensor.

Technical data

Flow sensor

Sizes	DN 25 - 1000
Connections	Flange (DIN, ANSI, JIS)
Housing + Flange material	Lacquered RAL 9006 (optional: stainless steel)
Flow tube material	Lacquered RAL 9006
Electrode assembly	2 signal electrodes and 1 ground electrode
Electrode material	AISI 316L (1.4404), optional: Hast-C, titanium, tantalum, platinum
Liquids	Water, water-glycol mixtures
Nominal pressure	Flanges EN1092-1 PN16 standard; options: PN10, PN25, PN40, ANSI150, ANSI300, JIS7.5K, JIS10K
Protection class	IP 67 (compact version), IP 68 (split version)
Liner	Standard: PP up to DN 150, Ebonite from DN 200 High and low temperature: PTFE
Liquid temperatures	PP 0 °C to 60 °C, Ebonite -5 °C to 80 °C, PTFE -20 °C to 100 °C (PTFE for remote version up to 110 °C, optional with PFA until 180 °C)
Ambiant temperature	T_{Amb} = -10 °C to 60 °C
Min. electrical conductivity	20 µS/cm
Cable length split version	5, 10 m (not exchangeable, please specify before order), other lengths on request.
Approvals	MID, OIML R49, EN 1434, PTB K7.2 (DN 25 - DN 200)

Converter

Display	Graphical display with backlight 128 x 64 pixels. Without display available on request.
Configuration interface	USB-adapter with software (optional)
Measuring accuracy	±0.4 % (±0.002 m/s under 0.5 m/s)
Current output	0/4 - 20 mA (correspond to 0 - 100 % flow), load 800 Ohm
Digital output	- Output: max 1250 Hz, 100 mA, 40 VDC / open collector (programmable) - Status: 100 mA, 40 VDC, open collector (programmable)
Ambient temperature	-10° C to +60° C
Protection	IP 67
Features	- Bidirectional measuring - Empty pipe detection - Outputs galvanically isolated to power supply
Power supply	HV: 100 - 240 VAC, 44 - 66 Hz, min. Power 1.5W (sensor only), max. Power 5W LV:24 - 36 VDC / VAC, 44 - 66 Hz, min. Power 1.5W (sensor only), max. Power 5W

Compact version

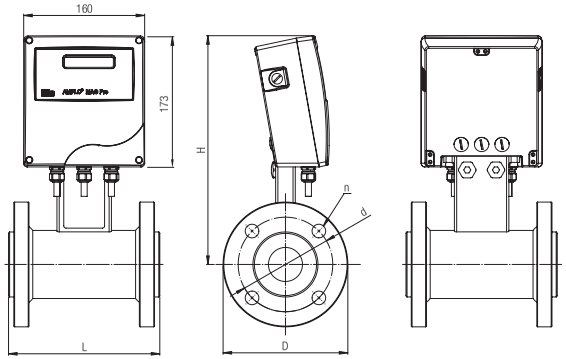

Remote version

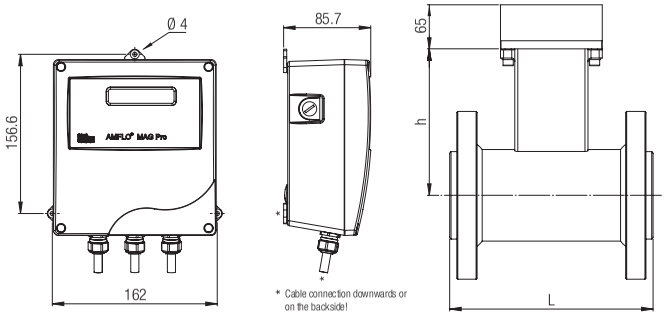

Dimensions

			EN 1092-1, PN 16						ANSI B 16.5, class 150						JIS B 2238, 10 k, PN 10					
DN		**L***	**H**	**h**	**D**	**d**	**n**	**m**	**H**	**h**	**D**	**d**	**n**	**m**	**H**	**h**	**D**	**d**	**n**	**m**
[mm]	[Inch]	[mm]	[mm]	[mm]	[mm]	[mm]	[mm]	[kg]	[mm]	[mm]	[mm]	[mm]	[mm]	[kg]	[mm]	[mm]	[mm]	[mm]	[mm]	[kg]
25	1	200	288	127	115	85	4x14	5	288	127	108	79.4	4x15.9	5	288	127	125	90	4x19	5
32	1 1/4	200	293	133	140	100	4x18	5.5	293	133	118	88.9	4x15.9	5.5	293	133	135	100	4x19	5.5
40	1 1/2	200	298	138	150	110	4x18	6	305	144	127	98.4	4x15.9	8.5	298	138	140	105	4x19	6
50	2	200	305	146	165	125	4x18	8.5	305	146	152	120.6	4x19	9.5	305	146	155	120	4x19	8.5
65	2 1/2	200	315	156	185	145	8x18	11	315	156	178	139.7	4x19	11	315	156	175	140	4x19	11
80	3	200	323	163	200	160	8x18	12.5	323	163	191	152.4	4x19	12.5	323	163	185	150	8x19	12.5
100	4	250	333	174	220	180	8x18	16	333	174	229	190.5	8x19	16	333	174	210	175	8x19	16
125	5	250	350	188	250	210	8x18	17.5	350	188	254	215.9	8x22.2	23.5	350	188	250	210	8x23	17.5
150	6	300	360	202	285	240	8x22	26.5	360	202	279	241.3	8x22.2	26.5	360	202	280	240	8x23	26.5
200	8	350	390	230	340	295	12x22	33.5	390	230	343	298.4	8x22.2	33.5	390	230	330	290	12x23	33.5
250	10	450	418	258	405	350	12x26	59.5	418	258	406	361.9	12x25.4	64.5	418	258	400	355	12x25	59.5
300	12	500	445	285	460	400	12x26	70.5	445	286	483	431.8	12x25.4	73.5	445	285	445	400	12x25	70.5
350	14	550	475	316	520	470	16x26	106	475	316	533	476.2	12x28.6	109.5	475	316	490	445	16x25	105.5
400	16	600	500	340	580	525	16x30	148	500	340	597	539.7	16x28.6	155	500	340	560	510	16x27	148
450	18	600	530	401	640	585	20x30	167	530	401	635	577.8	16x31.7	185	530	401	620	565	20x27	167
500	20	600	560	460	715	650	20x33	198	525	460	699	635	20x31.7	210	560	460	675	620	20x27	198
600	24	600	620	460	840	770	20x36	287	620	460	813	749.3	20x34.9	302	620	460	795	730	24x33	287
650	26	650							645	486	870	806.4	24x34.9	350						
700	28	700	655	495	910	840	24x36	383	715	553	927	864	28x34.9	360	655	495	905	840	24x33	383
750	30	750							700	540	984	914.4	28x34.9	414						
800	32	800	710	548	1025	950	24x39	482	780	619	1060	978	28x41.3	450	710	548	1020	950	28x33	482
850	34	850							755	594	1111	1028.7	32x41.3	550						
900	36	900	760	598	1125	1050	28x39	595	780	622	1188	1085.8	32x41.3	630	760	598	1120	1050	28x33	595
1000	42	1000	820	657	1255	1170	28x42	700	870	708	1346	1257.3	36x41.3	780	820	657	1235	1160	28x39	700

* Length tolerances according to ISO Standard 13359

Range of measurement

Approval for DN 25 - 200 with type examination certificate as an electromagnetic flowmeter according to Directive 2004/22 EC category MI-001 (OIML R49) - according to OIML R49, Q3/Q1 = R160

or

as part-device heat meter according to Directive 2004/22 EC, Category MI-004 (EN 1434) or PTB K7.2 - Accuracy class 2 according to EN 1434 - standard calibration R50. R100 calibration on request.

Nominal diameter	**DN**	**mm**	**25**	**32**	**40**	**50**	**65**
		inches	1	1 1/4	1 1/2	2	2 1/2
Typical operating range (~1 to 5 m/s)		m³/h	2 - 9	3 - 14	5 - 23	7 - 36	12 - 60
Overflow	qs/Q4	m³/h	20	31.3	50	78.8	125
Full scale value (~10 m/s)	100 %	m³/h	18	29	46	72	121
Nominal flow	**qp/Q3**	**m³/h**	**16**	**25**	**40**	**63**	**100**
Minimal flow	qi/Q2	m³/h	0.16	0.25	0.4	0.63	1
Starting flow	Q1	m³/h	0.1	0.156	0.25	0.394	0.625
Pulse value		l/pulse	1	1	1	1	1

Nominal diameter	**DN**	**mm**	**80**	**100**	**125**	**150**	**200**
		inches	3	4	5	6	8
Typical operating range (~1 to 5 m/s)		m³/h	20 - 90	30 - 140	50 - 220	65 - 300	120 - 570
Overflow	qs/Q4	m³/h	200	312.5	500	787.5	1250
Full scale value (~10 m/s)	100 %	m³/h	184	288	450	648	1152
Nominal flow	**qp/Q3**	**m³/h**	**160**	**250**	**400**	**630**	**1000**
Minimal flow	qi/Q2	m³/h	1.6	2.5	4	6.3	10
Starting flow	Q1	m³/h	1	1.563	2.5	3.938	6.25
Pulse value		l/pulse	1	1	10	10	10

Nominal diameter	**DN**	**mm**	**250**	**300**	**350**	**400**	**450**
		inches	10	12	14	16	18
Typical operating range (~1 to 5 m/s)		m³/h	200 - 900	300 - 1200	400 - 1700	500 - 2300	600 - 2900
Full scale value (~10 m/s)	100 %	m³/h	1800	2592	3528	4608	5832
Pulse value		l/pulse	10	100	100	100	100

Nominal diameter	**DN**	**mm**	**500**	**600**	**650**	**700**	**750**
		inches	20	24	26	28	30
Typical operating range (~1 to 5 m/s)		m³/h	700 - 3600	1000 - 5000	1200 - 6000	1400 - 7000	1600 - 8000
Full scale value (~10 m/s)	100 %	m³/h	7200	10368	12168	14112	16200
Pulse value		l/pulse	100	*	*	*	*

Nominal diameter	**DN**	**mm**	**800**	**850**	**900**	**1000**
		inches	32	34	36	40
Typical operating range (~1 to 5 m/s)		m³/h	1800 - 9000	2000 - 10000	2400 - 12000	2900 - 14000
Full scale value (~10 m/s)	100 %	m³/h	18432	20808	23328	28800
Pulse value		l/pulse	*	*	*	*

Full scale value limits the range of analog output (4 - 20 mA corresponds to 0 - 100 % flow).

* Pulse value individually defined

Änderungen vorbehalten / Sous réserve de modifications / Modification rights reserved
Copyright © INTEGRA METERING AG, Switzerland

INTEGRA METERING
info@integra-metering.com
www.integra-metering.com