CALEC® ST III Advanced (CST-III ADV)

Multi-protocol heating and cooling energy calculator

User manual

Legal notice

Document release index

Version	Date	Modification(s)
01	20/09/2023	First release
02	02/10/2023	Correction of communication data
03	30/11/2023	Communication frequency correction, Cover correction
04	29/03/2024	Corrections: electrical shema, pulse output value, cover marking
05	29/05/2024	Corrections of electrical shema
06	17/07/2025	Corrections, outputs and new application IM Connect+®
07	25/08/2025	Corrections, commissioning
08	19/08/2026	Add iOS compatability

Original instructions

Publisher

INTEGRA Metering AG
Ringstrasse 75
CH-4106 Therwil
Switzerland

Phone: +41 61 725 11 22
info@integra-metering.com
www.integra-metering.com

Reproduction of these instructions or parts of them in whatever form is not permitted without express written permission from the publisher.

The figures and information in these instructions are subject to technical changes that become necessary to improve the product.

Table of contents

Document release index ... 2

1 Introduction ... 6
1.1 About this product ... 6
1.1.1 Product description ... 6
1.1.2 Product identification ... 6
1.1.3 Technical data ... 7
1.1.4 Conformity ... 12
1.1.5 Declaration of conformity ... 12
1.2 About the instructions ... 13
1.2.1 Purpose of this instruction ... 13
1.2.2 Structure of overall documentation ... 13
1.2.3 Layout conventions ... 13

2 Safety ... 14
2.1 Explanation of warning notices ... 14
2.2 Intended use ... 14
2.3 General safety instructions ... 14
2.4 Specific safety warnings ... 15
2.5 Technical condition of the product ... 15

3 Product view ... 16
3.1 Product design ... 16
3.2 Functional description ... 16
3.3 Calibration and verification ... 17
3.4 Product features ... 17

4 Transport / scope of delivery ... 18

5 Installation ... 19
5.1 Conditions ... 19
5.2 Mechanical installation ... 19
5.2.1 Installation on a wall ... 19
5.2.2 Installation on a rail DIN EN 50222 ... 21
5.3 Electrical installation ... 22
5.3.1 Connecting the extension box ... 23
5.3.2 Connecting the CALEC box ... 24
5.3.3 Connecting 2-wire temperature sensors ... 25
5.3.4 Connecting 4-wire temperature sensors ... 26
5.3.5 Connecting flow meters without power supply ... 26
5.3.6 Connecting flow meters with a 3.6 V power supply ... 27
5.3.7 Connecting flow meters with a 24 V power supply ... 27
5.3.8 Connecting flow meters with a 24 V power supply and grounding ... 28
5.3.9 Connecting the digital output ... 28
5.3.10 Connecting the M-Bus (wired and wireless) ... 29
5.3.11 Connecting the communication modules ... 30
5.3.12 Activating the backup battery ... 35

6 Operation ... 36
6.1 Operating elements ... 36
6.1.1 Display ... 37
6.1.2 Buttons ... 38
6.2 Switching on the meter ... 38
6.3 Navigating through the menus ... 39
6.4 Editing parameter values ... 40
6.5 Entering the service mode ... 40
6.6 Menu structure ... 41
6.6.1 Counter ... 41
6.6.2 Info ... 41
6.6.3 Test ... 42
6.6.4 Instant ... 42
6.6.5 Time ... 42
6.6.6 Stich ... 42
6.6.7 Logger ... 43
6.6.8 Inputs ... 43
6.6.9 Outputs ... 44
6.6.10 I-Out (active / passive) ... 44
6.6.11 Units ... 45
6.6.12 M-Bus ... 45
6.6.13 Modbus ... 45
6.6.14 N2-Bus ... 45
6.6.15 BACnet ... 46
6.6.16 LON ... 46
6.6.17 KNX ... 46
6.6.18 wMBus ... 46
6.6.19 LoRa ... 46
6.6.20 Config ... 46
6.6.21 System ... 47
6.6.22 Init ... 47
6.7 Commissioning ... 48
6.7.1 Smart Phone commissioning ... 48
6.8 Additional functions ... 49
6.8.1 Billing date values ... 49
6.8.2 Data logging ... 49
6.8.3 Simultaneous readout ... 49
6.8.4 Low-flow OFF function ... 49
6.8.5 Energy metering in heating / cooling systems ... 49
6.8.6 Recording of „heat return“ ... 49
6.8.7 Heat carriers with frost protection additives ... 49
6.8.8 Solar-powered thermal systems ... 50
6.8.9 CALEC® ST III Flow ... 50

7 Maintenance ... 51
7.1 Calibration ... 51

8 Service and repairs ... 52
8.1 Exchanging the calculator ... 52
8.2 Troubleshooting ... 52

9 Decommissioning / storage / disposal 54
9.1 Decommissioning 54
9.2 Storage 54
9.3 Disposal 54

Appendix 55
Drilling template 55

1 Introduction

1.1 About this product

1.1.1 Product description

CALEC® ST III is a high-end energy meter used in the areas of:

- commercial buildings / building technology
- near and district heating / district cooling
- residential construction / sanitary

The main applications of the product are:

- System integration component

With the versatile interfaces of CALEC® ST III the energy data of all thermal applications can be easily integrated in subordinate energy manage-ment and building control systems.

- Heating / cooling transmission station Together with the various flow meters of INTE-GRA Metering, the energy cal-culator CALEC® ST III offers the perfect combina-tion for the determination of performance data in medium heating applications, in particular for distribution stations and larger buildings.

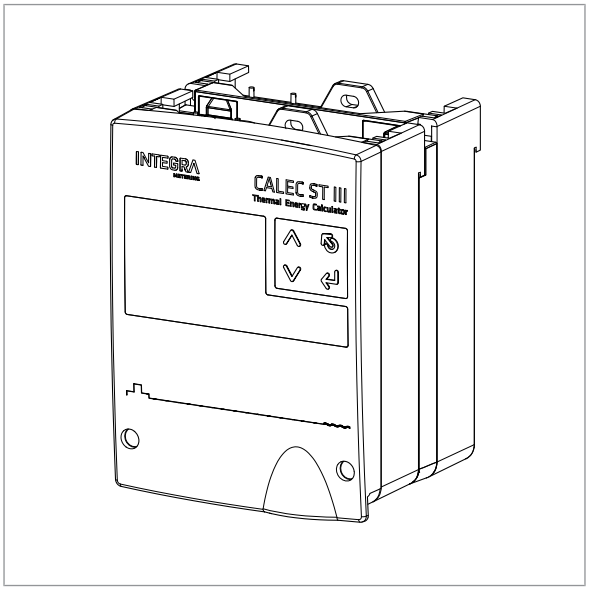

1.1.2 Product identification

The face plate on the CALEC® ST III states the fol-lowing information:

1 Serial number / manufacturing year
2 Article number
3 IP protection code
4 Power supply specification
5 Address of manufacturer
6 Marking heating (Europe CE)
7 Type of temperature sensor
8 Range of ambient temperature
9 Range of medium temperature
10 Range of medium temperature difference
11 Environmental class and mechanical envi-ronmental class
12 Battery specification
13 Marking cooling (CH)
14 Marking cooling (DE)
15 Ambient temperature Class

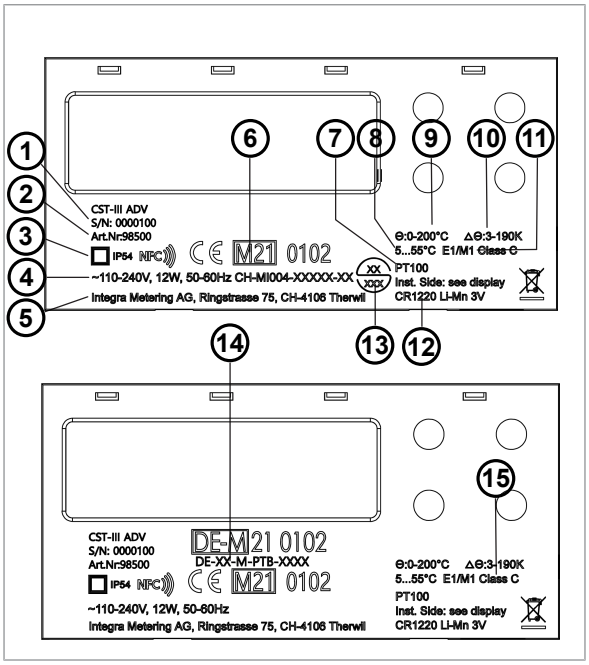

1.1.3 Technical data

Housing and operating conditions	
Dimension	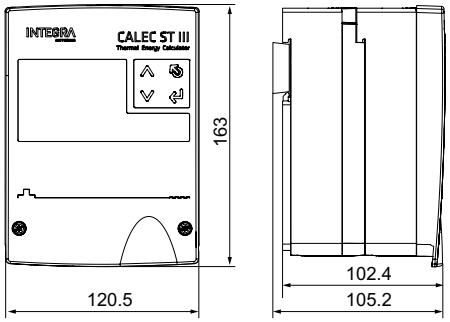
Ambient temperature	+5 ... +55 °C, EN 1434 class C
Storage temperature	0...60 °C
Humidity	Max. 95 %
Operating altitude	Up to 2000 m above sea level
Protection class	IP54 according to EN 60529
Terminals	Signal connection: 1.5 mm^2 screw terminals Power connection: 2.5 mm^2 screw terminals
Lifetime	Operational period 15 years, includes 3 cycles of calculator-module and thermal probes replacement.
Protection against mechanical stress	Vibrations / shock according to EN 1434 – 7.23
Mounting	Wall mounting with 3 points DIN-rail mounting (DIN-EN 50222)
Cable inlets	2x Ø 4-8 mm power port 8x Ø 2.5-5 mm signal port 2x Ø 4-8 mm signal port

Basic data for calculator	
Temperature measuring range	0...+200 °C (heat carrier: water) -40...+180 °C (special heat carrier)
Temperature difference	0...199 K Type approval 3...190 K On demand 1...199 K and 2...199 K
Temperature sensor	Pt 100, Pt 500, Pt1000 according to IEC 751 paired in accordance with EN 1434 2-wire or 4-wire connection. Max. sensor cable length 2-wire connection: 10 m Max. sensor cable length 4-wire connection: 100 m
Temperature measurement resolution	20 bit resolution, typical ± 0.005 K (Ta = 5...55 °C)
Installation side	Hot or cold side
Pulse value of the flow meter	0.001...9999.999 liters or m^3
Pulse values and units for auxiliary inputs and contact outputs	Volume: 0.001...9999.999 ml, l, m^3, GAL Energy: 0.001...9999.999 Wh, kWh, MWh, MJ, GJ, KBTU, MBTU Mass: 0.001...9999.999 T, Kg Unitless mode possible: 0.001...9999.999
Error limits	Better than those required for calculators in accordance with EN 1434-1. Suitable for combined class 2 heat meters in accordance with EN 1434-1 when used with suitable volume metering units
NFC interface	For commissioning / parametrization: 13.56 MHz

Basic data for calculator	
Bluetooth interface	For commissioning / parametrization: 2.4 GHz chip antenna Class III (1mW)

Display	
Display type	Backlit multi-function LCD display with 8 digits for meter reading. Symbols and short texts for user operation purposes.
Display size	15 mm x 68 mm
Display resolution and units volume	1 – 0.001 m^3, US Gal
Display resolution and units energy	1 – 0.001 kWh, MWh, MJ, GJ, KBTU, MBTU
Display resolution and units mass	1 – 0.001 T
Error display	Visible fault state indicator in display. Display blinks red in case of an error. See Troubleshooting [▶p. 52] for details.

Additional functions	
Data logger	500 values from all readings with a time stamp, stored in ring memory, logger interval, 1 minute, 1 hour, 1 day, 1 week, 1 month
Billing data values	12 freely programmable billing dates to memorize indexes (e.g. monthly) for defined dates. Indexes can be consulted any time.
Flow rate configuration	Specific configuration for flow rate measurement purposes only. It can be 1 channel, 2 channels or 2-channel pulse collector to calculate the total sum. Temperature measurement is disabled; no temperatures are detected or displayed.
Glycol-based medium	The “Glycol-based heat transfer medium” (GLY) option offers an excellent solution for solar-power thermal systems.
On-site settings	One-time on-site setting for calibration-relevant input values “IMP EBS”
Simultaneous readout	The specific “freeze” command makes it possible to store the desired values, which can then be read out one by one from the system.
Bi-directional energy metering BDE	The BDE option allows emitted energy to be measured even in twin-conduit networks that perform a combined heating and cooling function. The measurement readings for heating and cooling are recorded separately for their corresponding cost calculation purposes.
Combined heat- / cold meters BDV	The BDV option allows the measuring of energy exchange (draw/supply) for interlinked networks and charging / discharging in heat accumulators. The measurement of positive and negative are recorded separately for their corresponding energy consumption.
Heat- / cold meters with two parallel flow sensors TWIN-V	The Twin-V option is suitable for summer / winter metering where heating and cooling meters have two parallel flow sensors.
Heat- / cold meters DTF	The DTF option allows the measuring of energy heating or cooling meter with external tariff control for two tariff registers.
Heat- / cold meters Twin-E	The Twin-E option allows a measurement of parallel consumers composed of one closed circulation and one open circulation with reference temperature.
Heat- / cold meters TGR	The TGR option allows a measurement with bonus / malus tariff management including reference temperature control.
Heat- / cold meters eight tariffs	This option allows the management of up to eight different tariffs with reference temperature control. The measurement is split into different registers.
Data backup in the event of a power failure	In EERPOM >10 years

Additional functions	
Adjustable low temperature difference ΔT cut-off (LFCO)	Function for stopping the energy calculation when the temperature difference is too low, ΔT LFCO adjustable ΔT = 0-2.99 K.
Limit value monitoring	One-sided or two-sided, hysteresis 0 – 10 %, action of the output signal is selectable.

Mains version	
Power supply	12 W / 110-240 VAC, 50-60 Hz (according to EN 1434).
Calculation cycle	1 s
Backup battery real-time clock	3 V Li-Mn CR1220, 3 months backup

Low voltage power supply for flow meters		
	Voltage	Flow meter
Supply voltage	2x 3.6 VDC, max. 2 mA galvanic isolation max. 48 VDC	e.g. AMFLO® SONIC UFA 113
	1x 24 VDC, max. 150 mA galvanic isolation max.48 V DC	e.g. AMFLO® MAG Smart or active sensors
3.6 V sensor power output	Power supply, galvanically isolated to the system, for external flow meters.	
	$V_{out\ nom}$	3.6 V
	$V_{OUT\ min}$	3.45 V
	$V_{OUT\ max}$	3.75 V
	$I_{Out\ max}$	10 mA
	V_{Ripple}	50 mV
	Load regulation	±1 % @ load steps of 5 mA
	Insulation voltage galvanic isolation	Normative 48 V technical: 312 VAC
	Clearance to other circuits	0.5 mm
24 V sensor power output	Power supply, galvanically isolated to the system, for external loads or flow meters.	
	$V_{out\ nom}$	24 V
	$V_{OUT\ min}$	22 V
	$V_{OUT\ max}$	26 V
	$I_{Out\ max}$	180 mA
	V_{Ripple}	200 mV
	Load regulation	±6 % @ load steps of 100 mA
	Insulation voltage galvanic isolation	Normative 48 V Technical: 312 VAC
	Clearance to other circuits	0.5 mm

Pulse inputs	
Input #1 (10/11) Input #2 (54/55)	Connecting a pulse generator according to NAMUR, with potential-free contact (reed relay) or SSR (solid state relay).

Pulse inputs		
Pulse input class ID	2-wire pulse input according to class ID compliant with EN1434-2 Suitable for NAMUR-, “Open Collector” or mechanical pulse sources	
	Supply voltage	8...8.4 V
	Source impedance	1 kΩ
	Switching threshold IL	2.1 mA
	Switching threshold IH	1.2 mA
	Pulse length	≥ 2 ms
	Pulse pause	≥ 2.5 ms
	Max. pulse frequency	≤ 200 Hz
	Typical input capacitance	20 nF

Pulse outputs		
Output #1 (50/51)	Passive digital output	
Pulse output	Contact rating	48 VDC, 100 mA
	Electrical isolation	48 V
	Contact resistance (on)	<30 Ω
	Contact resistance (off)	>10 MΩ
	Pulse frequency	Max. 10 Hz
	Pulse width is fixed	50 ms

M-Bus (on-board or option)	
M-Bus interface	According to EN 13757-2/-3
Addresses	Primary address: 0 Standard secondary address: 99999999
Baud rate	300, 2’400, 9’600 Baud

wM-Bus (on-board or option)	
wM-Bus interface	According to EN 13757-4 / OMS 4.0
Frequency band	868 MHz (T1 Mode 5 and mode 7) - 25 mW (14 dBm)
Addresses	OMS address including serial number of the device

Modbus RTU (option)	
Physical layer and address	RS 485 / address: 1
Baud rate	300, 2’400, 9’600, 19’200, 38’400 Baud
Address range (slave)	1...247
Parity	Even
Function code	03: Read holding register

LON interface (option)	
Type	LON TP-FT 10 Free topology (2-wire twisted pair) Certified in accordance with LONMARK® 3.4
Baud rate	78 k Baud
Max. bus length	500 m / 2700 m with/without termination resistors 64 nodes per segment

BACnet MS/TP (option)	
Physical layer and AMT ID	RS 485 / ID: 431
BACnet device profile and instance	B - ASC / the last 5 digits of the serial number
BACnet MAC address	The last 2 digits of the serial number
Baud rate and mode	Automatic / master

N2Open (option)	
Physical layer and address	RS 485 / address: 1...255 / Default: 1
Baud rate	9'600 Baud

2 analog outputs 2AOU (option)	
Output signal	4...20 mA or 0...20 mA
Supply voltage	6...24 VDC
Electrical isolation	max. 48 VDC
Maximum resistance	≤ 837 Ω at 24 VDC, 0 Ω at 6 V
Maximum transformer error	0.15 % of measured value + 0.15 % of end value
Supported modes	Active and passive

2 pulse outputs DOU (option)	
Contact rating	48 VDC, 100 mA
Electrical isolation	48 V
Contact resistance (on)	<30 Ω
Contact resistance (off)	<10 MΩ
Pulse frequency	Max. 10 Hz
Pulse width	50 ms

KNX (option)	
Type	TP1 (2-wire twisted pair), certified according to KNX standard 2.1
Max. power consumption	10 mA
Baud rate	9'600 Baud

LoRa Wireless (option)	
Communication interface	LoRaWAN
Frequency band	868 MHz - 25 mW (14 dBm)
Addresses	LoRa address
Max. power consumption	50 mA
Impedance of antenna	50 Ω
Gain	0 dB
Antenna	Connector SMA Max. emitted power: 14 dBm

Smart Phone Commissioning	
Operating system	Android and iOS; available on Google Play Store and on App Store
App	IM Connect+®
Features	Commissioning and readout via NFC and Bluetooth interface for better usability

1.1.4 Conformity

CE guidelines	
2014/32/EU	Measuring Instruments Directive (MID)
2014/30/EU	Electromagnetic Compatibility (EMC)
2014/35/EU	Low Voltage Directive (LVD)
2012/19/EU	Waste Electrical and Electronic Equipment (WEEE)
2011/65/EU	Restriction of hazardous substances in electrical and electronic equipment (RoHS)
2014/53/EU	Radio Equipment Directive (RED)
Standards	
EN 1434	
EN 13757-2/3/5/6	
EN 61010-1	
EN 62368-1	
DIN 43863-5	
EN 301 489-3:V2.1.1	
EN 301 489-17:V3.2.0	
EN 61000-3-2	
EN 61000-3-3	
EN 61326-1	
EN 62479	
EN 300 220-2:V3.1.1	
EN 300 330:V2.1.1	
EN 300 328:V2.1.1	
Specific	
PTB K7.2 (DE), Ordonnance of FDJP 941.231 (CH), Welmec 7.2, OIML D11	

1.1.5 Declaration of conformity

The declaration of conformity is available by scanning the QR-Code.

1.2 About the instructions

1.2.1 Purpose of this instruction

This instruction is part of the product. Keep the instruction handy so that it is always accessible at all times.

This instruction is intended to ensure that the product is used safely and for the intended purpose. The operator must ensure that the operating personnel have read and understood the instructions. The operator must ensure that the operating instructions of the associated products are also read and understood.

1.2.2 Structure of overall documentation

The following documents complete the documentation of this product:

- User manual (this document). Available for download on https://integra-metering.com/downloads
- Installation guide. Included in the product delivery.
- Technical data sheet. Available for download on https://integra-metering.com/downloads

1.2.3 Layout conventions

Symbols and text markups

This document contains various symbols and text markups.

Symbol	Name	Function
•	Enumeration	The grey dot marks a non-numbered list.
▶	Action	The grey triangle marks actions that must be performed in the corresponding order.
▶ ▷	Reaction	The white triangle marks the reaction to an action.
(1)	Item numbers	The numbers inside the brackets refer to the items in an image.
Legal notice [▶p. 2]	Cross-reference	Cross-references are used to refer to a chapter within the document. They are linked and are accessible from the PDF by a mouse click.

Tips are used to support the reader in handling the product.

2 Safety

2.1 Explanation of warning notices

⚠ DANGER

Danger

This safety warning indicates a hazard of high risk that will lead to serious physical injury or death.

▶ Measures to avoid the hazard.

⚠ WARNING

Warning

This safety warning indicates a hazard of medium risk that may lead to serious injury or death.

▶ Measures to avoid the hazard.

⚠ CAUTION

Caution

This safety warning indicates a hazard of low risk that may lead to minor or moderate injury.

▶ Measures to avoid the hazard.

NOTICE

Notice

The notice indicates a situation which may cause damage to property.

▶ Measures to avoid the property damage.

2.2 Intended use

The CALEC® ST III is exclusively designed for the collection, analysis, presentation and transmission of information.

The product must only be used for applications in accordance with the specifications in the technical data. Any other use is prohibited and is considered inadmissible.

2.3 General safety instructions

Personal safety

Make sure that your actions do not expose anyone to risk.

Personnel requirements

Any work on the product may only be carried out by qualified personnel. Necessary instruction can be provided by the manufacturer.

Occupational safety

The operator is subject to the legal obligations of occupational safety. Compliance with all locally applicable accident prevention regulations and general rules is the responsibility of the operator.

Instructions

The operating personnel must have read and understood the instructions. All safety instructions and instructions for action must be strictly observed. The operating instructions must be kept within easy reach.

Further operating instructions

The instructions of the associated products must also be read and understood. All safety instructions and instructions for action must be strictly observed.

2.4 Specific safety warnings

⚠ DANGER

High voltage

Touching energized system parts can cause immediate death or serious injury.

- Before carrying out any work on the system, disconnect the power supply and check that no voltage is present.

⚠ CAUTION

Heat hazard

Danger of minor burn injuries through contact with hot surfaces.

- Do not touch device if heated up.

2.5 Technical condition of the product

Spare parts

Replace defective parts only with original spare parts from INTEGRA Metering.

Software

The software must not be modified.

Backfitting

The product must not be backfitted. Changes of the operating mode must be agreed in writing with the manufacturer.

3 Product view

3.1 Product design

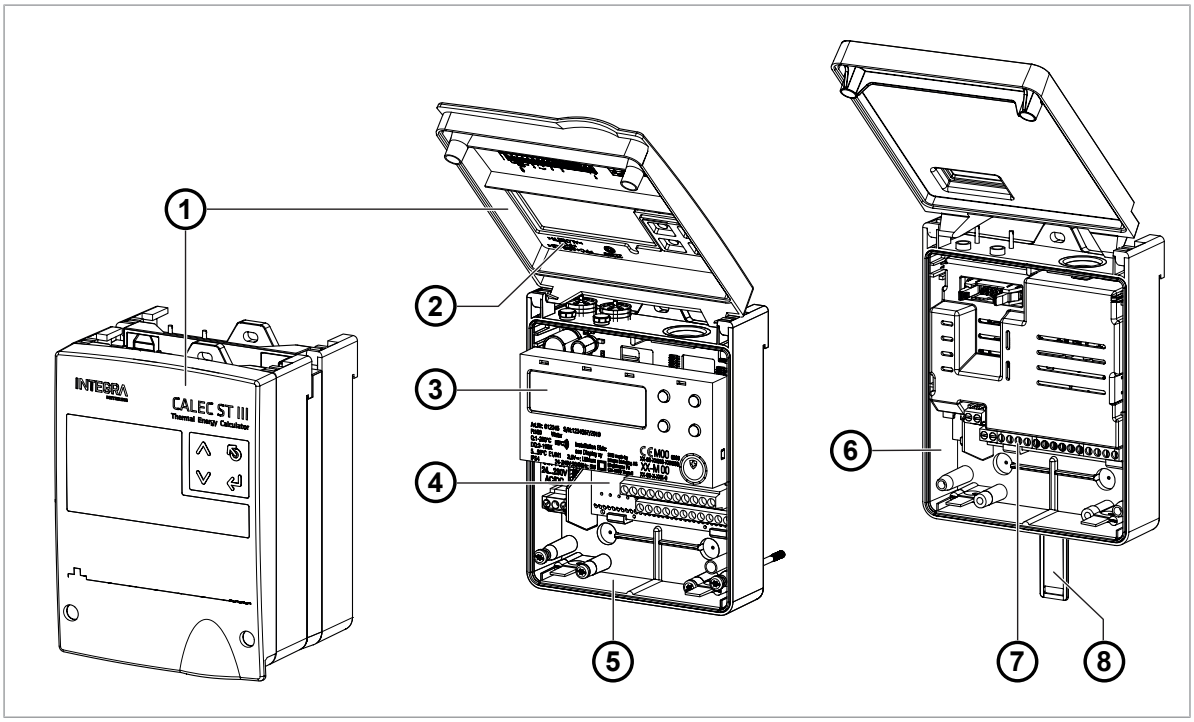

1	Front cover	5	CALEC box
2	Connection diagram (inside of front cover)	6	Extension box
3	Pluggable calculator	7	Connectors for additional communication modules
4	Motherboard with connectors	8	Clip-on holder for top-hat rail

3.2 Functional description

A heat or cooling meter is composed of the following individually approved sub-assemblies:

1. Energy calculator
2. Temperature sensor for forward
3. Temperature sensor for return
4. Flow meter

The thermal output (P) of a pipe-conduit network is based on a measurement of the flow temperature, return-flow temperature and volume flow of the heat transfer medium.

P = Volume of flow × (T heat side - T cold side) × k

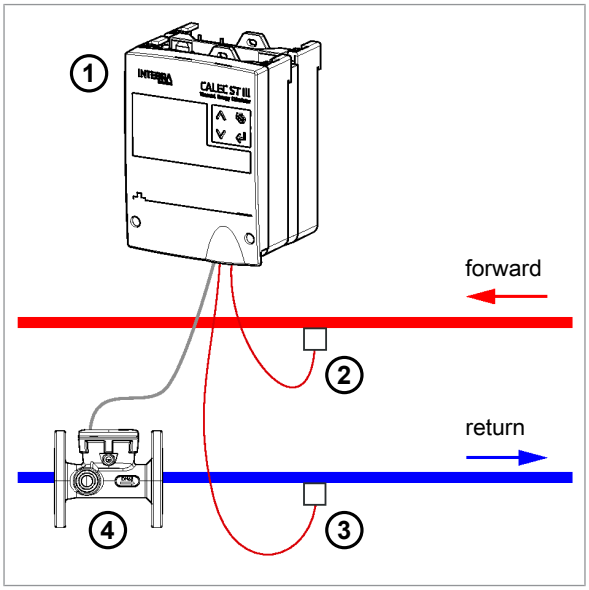

Flow-rate measurement

The system is compatible with all standard flow meters which use a pulse output. The pulse value should be set as low as possible if continuous measurement or high-resolution energy metering is required.

The mains-powered CALEC® ST III can operate with contactors up to 20 Hz and electronic transmitters (NAMUR, etc.) with pulse frequencies of up to 200 Hz.

The flexible calculation of heat capacity and density facilitates accurate energy measurement, not only for water circuits, but also for a variety of other heating or refrigeration media.

The point of installation of the flow meter is crucially important, because the volume-to-mass conversion is based on the temperature detected at this point.

It is preferable to fit the flow meter to the section of the line where the temperature is closest to room temperature.

Temperature measurement

The CALEC® ST III is fitted with two highly accurate temperature measurement inputs. They are each connected to type-approved, paired temperature sensors in two- or four-wire configuration. The planning of systems should conform to heat meter standard EN 1434, parts 2 and 6. EN 1434-4 stipulates that only sensors of the same design and length should be paired together.

The counter mechanism is available in either Pt 100, Pt 500 or Pt 1000 configuration.

Thermal energy is measured from a temperature difference from dT above (respectively below) 0 K. The CALEC® ST III is the ideal solution for air-conditioning or cooling installations when used with appropriate temperature sensors and flow meters for cooling.

3.3 Calibration and verification

In most countries energy metering systems used for commercial purposes are subject to compulsory verification. The devices comprising the metering system must all possess official pattern approval. CALEC® ST III has been approved according to both the European Measuring Instruments Directive 2014/32/EU and the German PTB K 7.2 directive for cooling meters.

Officially verified heat and cooling meters must be reverified before the verification period has expired. The operator is responsible for compliance with this requirement. (Re-)Verification includes all parts (temperature and flow sensors, calculator) forming the complete heat meter. The plug-in calculator minimizes the cost of recalibration as the wiring does not have to be disconnected and device-specific data remain stored in the configuration memory in the base of the housing.

The “IMP EBS” option makes it even easier to set up devices which require calibration, as the pulse value and installation side can be set on-site.

AMBUS® WIN II can be used for parameterization, adjustment to new conditions and to read data from the device. AMBUS® WIN II is available as a free download.

3.4 Product features

The main features of CALEC® ST III Advanced are:

- High end and extended applications
- Wide range power supply: 110–240 V AC
- Sensor power supply 2×3.6 V and 24 V DC
- Various communication interfaces (up to 6)
  - 1× wireless communication on board (WM-Bus)
  - 1× wired communication on board (M-Bus)
  - 2× RS485 on board module, configurable
  - 6× extension slots for adding options: M-Bus, Modbus, BACnet, KNX, N2Open, LON, Wireless LoRa, 2AOU, 2DOU
- 2× inputs for temperature 2 / 4-wires (PT100 / 500 / 1000)
- 2× master inputs (volume / status)
  - On the second input, pulse, volume, mass, energy, status and alarm can be selected as input.
  - More inputs over slots possible
- 1× digital output
  - Pulses, limit 1, limit 2, alarm, M-Bus and test can be selected as output.
- NFC and Bluetooth communication on-board for commissioning

4 Transport / scope of delivery

NOTICE

Transport damage

Non-compliance with the required transport and environmental conditions can lead to transport damage and malfunctions.

- Protect the product from heat, moisture, dirt and vibration.
- Store the product in a cool and dry place.
- Do not remove the packaging until immediately before installation.

Check delivery

- Check delivery to ensure supply is complete.
- Check delivery for transport damage immediately upon receipt.

In case of externally visible transport damage, proceed as follows:

- Do not accept delivery or accept it under reserve.
- Note the extent of damage on the transport documents or on the delivery note of the carrier.
- Report any damage to INTEGRA Metering immediately.

5 Installation

CALEC® ST III can be installed on a flat wall or on a mounting rail. Suitable mounting rails are available as accessories.

5.1 Conditions

▶ Meet the following conditions according to the specifications in the Technical data [▶p. 7] to ensure a reliable operation.

- Space requirements
- Ambient conditions
- Dimensions
- Electrical connection

5.2 Mechanical installation

Installation location

NOTICE

Material damage due to inappropriate environmental conditions

Non-compliance with the required environmental conditions can lead to material damage and malfunctions.

▶ Ensure that the product is accessible for installation, operation and maintenance work.

▶ Avoid heat, moisture, dirt and vibration.

▶ Install the product in a cool and dry place.

▶ Ensure a safe distance to sources of electrical noise.

▶ Make sure that there is a clearance of 50 mm above the open cover of the meter.

▶ Make sure that there is a distance of 85 mm between the top edge of the mounting rail and the ceiling.

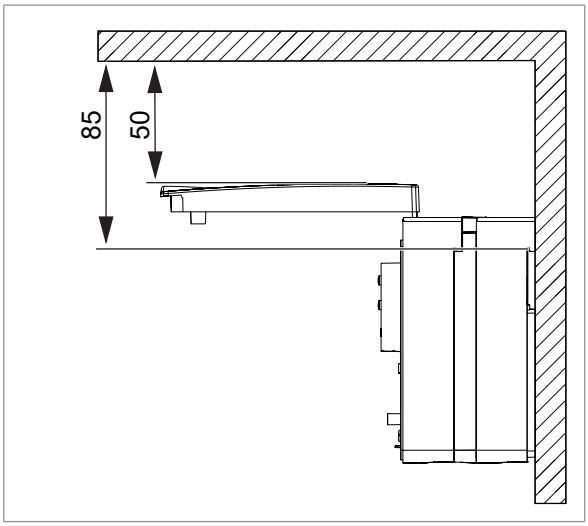

5.2.1 Installation on a wall

Tools and installation material are not included in the delivery.

- Flat screwdriver 3.5×0.6
- Torx screwdriver TORX T15
- Drill bit Ø6
- Screws 3×Ø4, screw length min. 45 mm
- Dowels 3×Ø6
- Washers 3×4.3×12

- Remove the two screws (1).
- Separate the CALEC box (2) from the extension box (3).

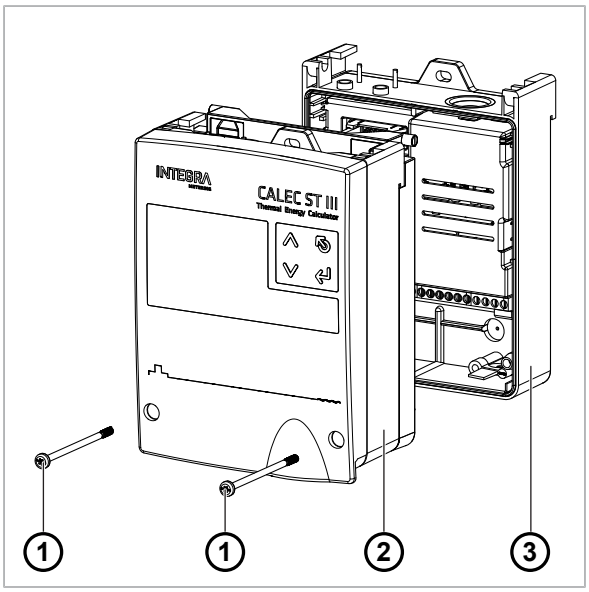

- Using the drilling template [▶p. 55], drill three holes Ø6 mm into the wall.
- Mount dowels 3×Ø6.
- Mount the extension box with the three screws (1) and washers onto the wall.

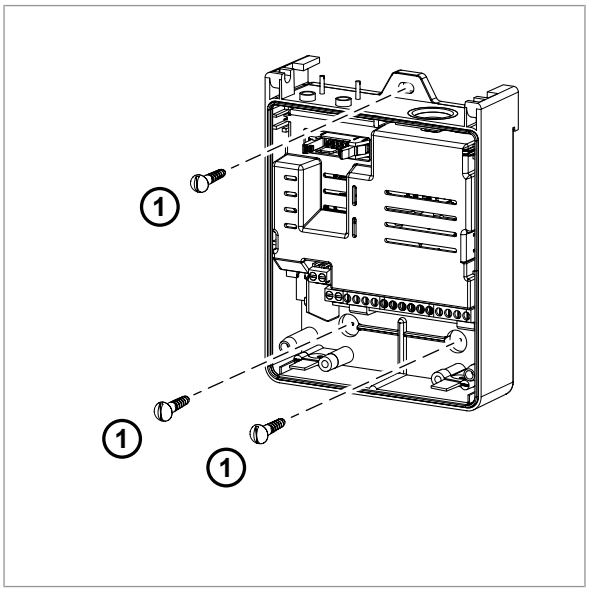

- Attach the CALEC box (1) to the extension box (2).
- Close the cover (3).
- Insert and tighten the two screws (4).
- Remove the safety caps (5) from the top of the housing. Attach them to each screw with the smooth side facing outwards.

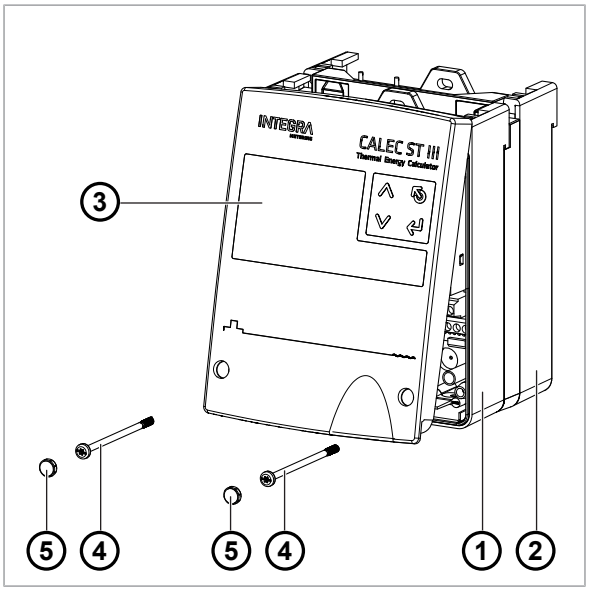

5.2.2 Installation on a rail DIN EN 50222

Tools and installation material are not included in the delivery.

- Flat screwdriver 3.5×0.6
- Drill bit Ø6
- Screws 2×Ø4, screw length min. 45 mm
- Dowels 2×Ø6
- Washers 2×4.3×12

▶ Using the drilling template [▶p. 55], drill two holes (1) Ø6 mm into the wall.

▶ Mount dowels 2×Ø6.

▶ Mount the rail (2) with the two screws (3) and washers onto the wall.

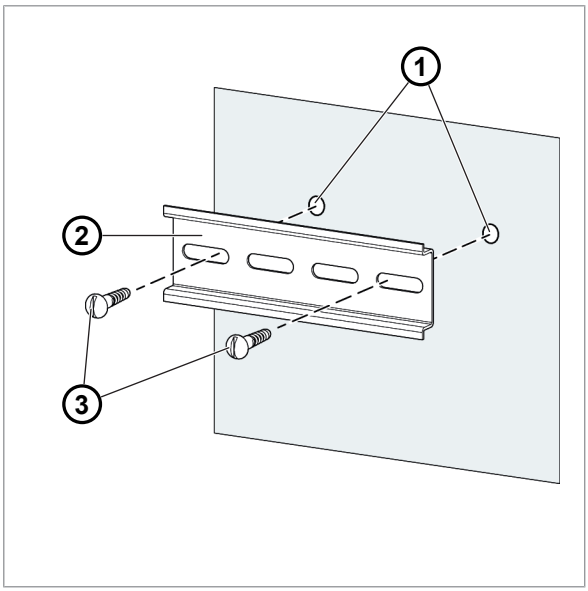

▶ Clip and fix the CALEC® ST III (1) on the rail (2).

▶ Push up the clip-on holder (3).

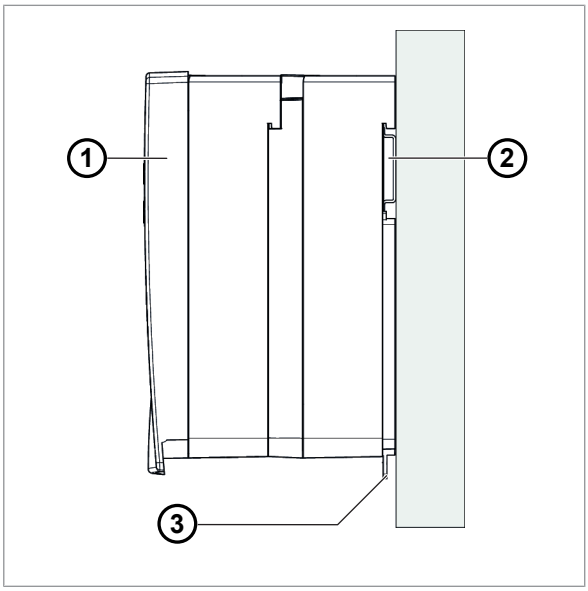

5.3 Electrical installation

⚠ DANGER

Electric shock

Touching energized system parts can cause immediate death or serious injury.

- ▶ Make sure that installation work is only carried out by authorized specialists.
- ▶ Before carrying out any work on the system, disconnect the power supply and check that no voltage is present.
- ▶ If an insulation is damaged, disconnect the power supply immediately and arrange for immediate repair.

⚠ DANGER

Health hazard from button cell battery

Ingestion may cause severe injury and death.

- ▶ Keep out of reach of children.
- ▶ Seek immediate medical attention if ingested.
- ▶ Keep batteries in original packaging until needed.
- ▶ Dispose of used batteries immediately. See Disposal [▶p. 54] for details.

Also, do not burn, discard, or scour the button cell battery. Do not short-circuit the battery - risk of explosion!

The device is equipped with screw terminal connectors. Stripped rigid conductors or flexible conductors with crimped ferrules (AEH) can be plugged directly into the screw terminal.

Connectable conductors:

- Wire range (rigid or flexible): 1.0...2.5 mm^2
- Cable with minimum overall diameter: 7,5 mm
- Stripping length: 6-7 mm
- AWG 28-12

The functionality of different connections depends on the installed modules and the activated options.

The device shall be electrically protected by bipolar circuit breaker according to the used diameter cable (protection 4A recommended).

⚠ DANGER

Health risk associated with the position of the circuit-breaker

The distance of the circuit-breaker from the calculator can cause serious or even fatal injuries.

- ▶ This circuit-breaker is the means of disconnecting the appliance and must be installed close to the product in accordance with current standards.

A clamp must be added around the primary input cables (phase and neutral) as close as possible to the input connector, so that they can be held together in the event of incorrect tightening.

5.3.1 Connecting the extension box

- Remove the two screws (1).
- Separate the CALEC box (2) from the extension box (3).

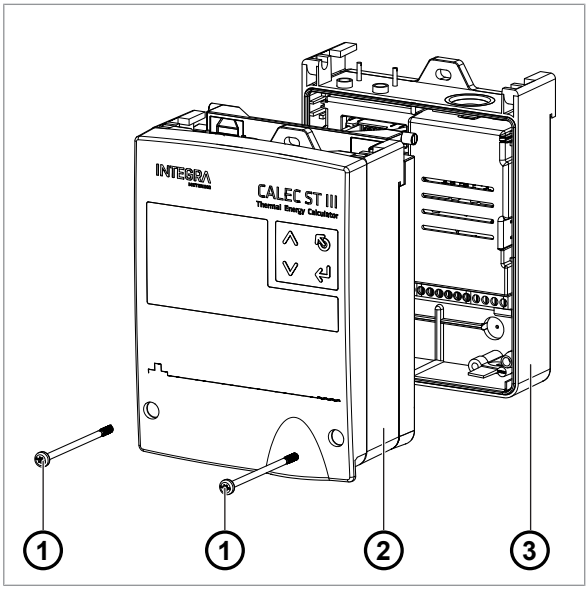

NOTICE

Wrong connections may destroy the device

The function and the marking of the terminals A51/B51, A52/B52, A61/B61, A62/B62 A71/B71, A72/B72, A81/B81 A82/B82 depend on the options installed in the device.

- Carefully check the installed options and choose the correct connections.

- Connect the extension box according to schematic below.

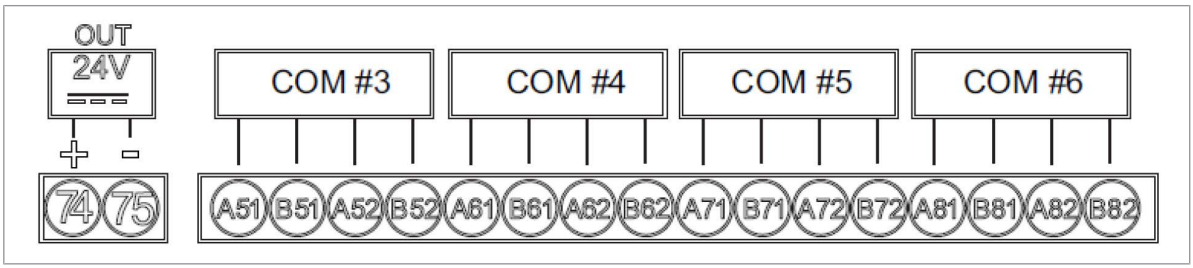

Label	Function	Label	Function
B51 A51	Socket #3 Channel 1	B52 A52	Socket #3 Channel 2
B61 A61	Socket #4 Channel 1	B62 A62	Socket #4 Channel 2
B71 A71	Socket #5 Channel 1	B72 A72	Socket #5 Channel 2
B81 A81	Socket #6 Channel 1	B82 A82	Socket #6 Channel 2
74	Sensor power +24 V		
75	Sensor power -24 V		

5.3.2 Connecting the CALEC box

- Attach the CALEC box (1) to the extension box (2).
- Open the cover (3).

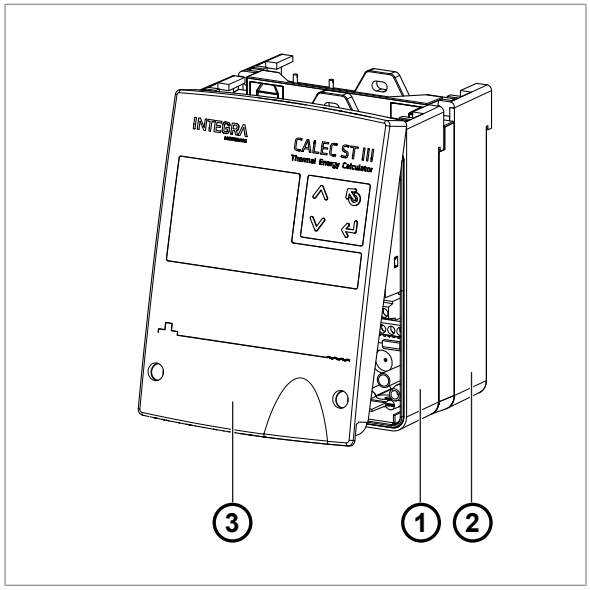

NOTICE

Wrong connections may destroy the device

The function and the marking of the terminals A11/B11, A12/B12, A21/B21, A22/B22, A31/B31, A41/B41, depend on the options installed in the device.

- Carefully check the installed options and choose the correct connections.

NOTICE

Incomplete wiring of the temperature sensors

Incomplete wiring of the 2-wire temperature sensors may lead to false measurement results.

- Always connect the 2-wire temperature sensors together with the four supplied wire bridges.

- Connect the meter according to schematic diagram on the inside of the front cover.

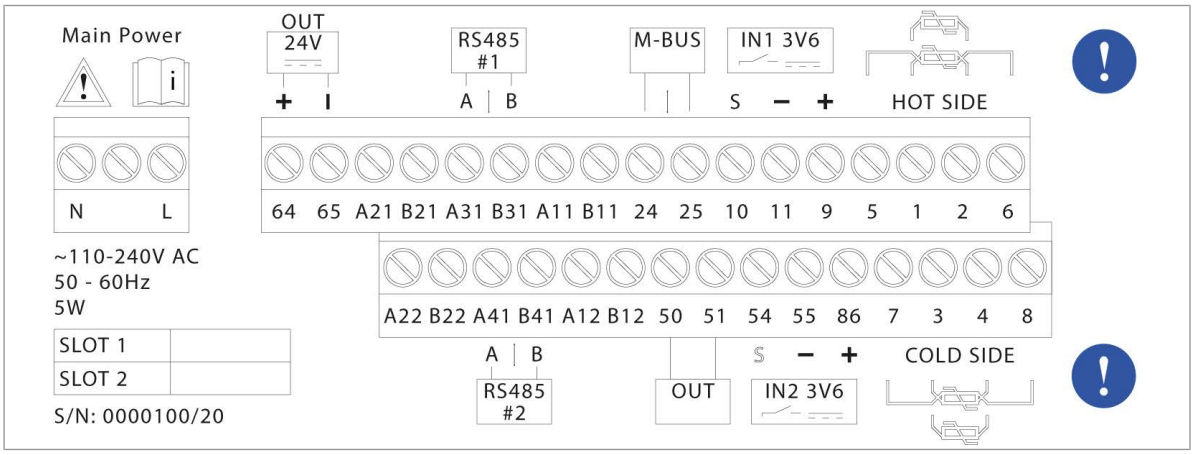

Upper row		Lower row	
Label	**Function**	**Label**	**Function**
6	Temperature Hot side (2/4 wires)	8	Temperature Cold side (2/4 wires)
2		4	
1		3	
5		7	

Upper row		Lower row	
Label	**Function**	**Label**	**Function**
9	Sensor power +3.6 V	86	Sensor power +3.6V
11	GND #1	55	GND #2
10	Pulse input #1	54	Pulse input #2
25	M-Bus B	51	Digital out A
24	M-Bus A	50	Digital out A
B11 A11	Socket #1 Channel 1	B12 A12	Socket #1 Channel 2
B31	RS485 #1 B	B41	RS485 #2 B
A31	RS485 #1 A	A41	RS485 #2 A
B21 A21	Socket #2 Channel 1	B22 A22	Socket #2 Channel 2
65	Sensor power -24 V		
64	Sensor power +24 V		
L, N	Main power supply		

5.3.3 Connecting 2-wire temperature sensors

NOTICE

Incomplete wiring of the temperature sensors

Incomplete wiring of the 2-wire temperature sensors may lead to false measurement results.

- ▶ Always connect the 2-wire temperature sensors together with the four supplied wire bridges.

- ▶ Disconnect the CALEC® ST III from the power supply.
- ▶ Take off the front cover.
- ▶ Connect the temperature sensor:
- T_{hot} terminals 1/2
- T_{cold} terminals 3/4
- ▶ Connect the four wire bridges:
- Between terminals 5/1
- Between terminals 2/6
- Between terminals 7/3
- Between terminals 4/8
- ▶ Close the front cover.

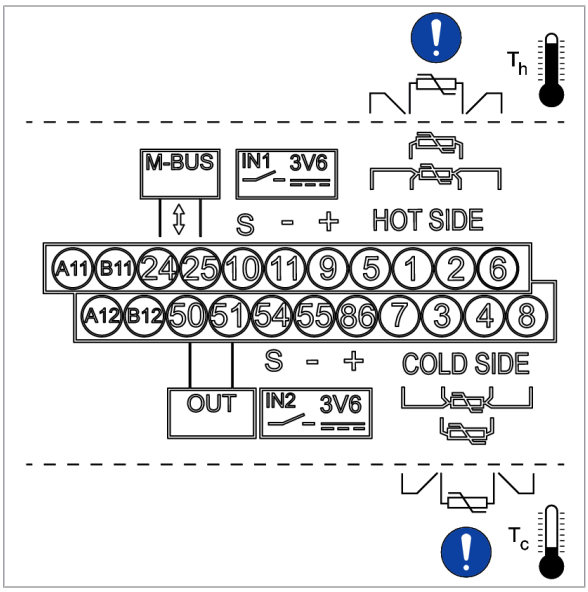

5.3.4 Connecting 4-wire temperature sensors

- ▶ Disconnect the CALEC® ST III from the power supply.
- ▶ Take off the front cover.
- ▶ Connect the temperature sensor:
- T_{hot} terminals 1/5 and 2/6
- T_{cold} terminals 3/7 and 4/8
- ▶ Close the front cover.

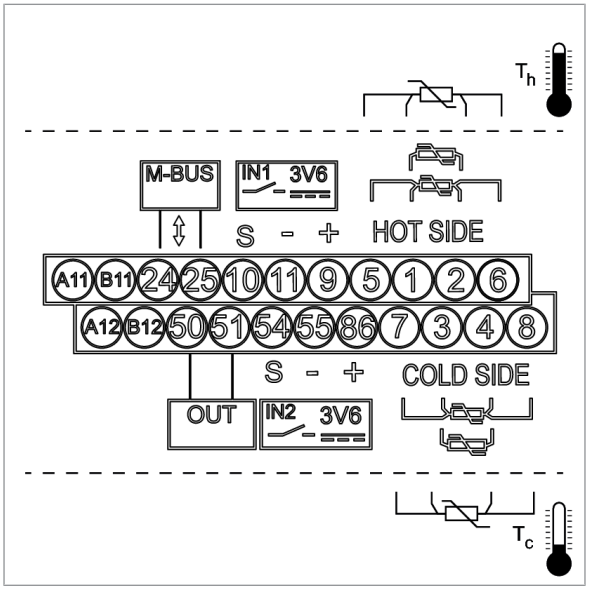

5.3.5 Connecting flow meters without power supply

- ▶ Disconnect the CALEC® ST III from the power supply.
- ▶ Take off the front cover.
- ▶ Connect cable (1) to terminal 10.
- ▶ Connect cable (2) to terminal 11.
- ▶ Close the front cover.

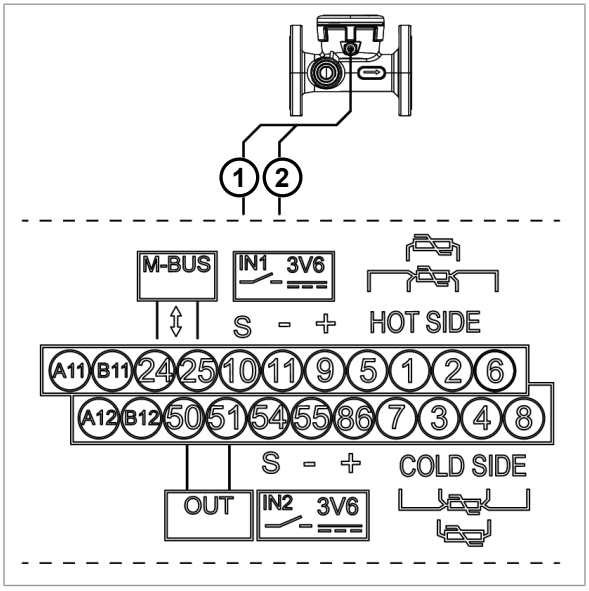

5.3.6 Connecting flow meters with a 3.6 V power supply

- Disconnect the CALEC® ST III from the power supply.
- Take off the front cover.
- Connect the brown power supply cable (1) 3.6 V to terminal 9 (+).
- Connect the blue cable (2) to terminal 11 (-GND).
- Connect the white cable (3) to terminal 10 (S).
- Close the front cover.

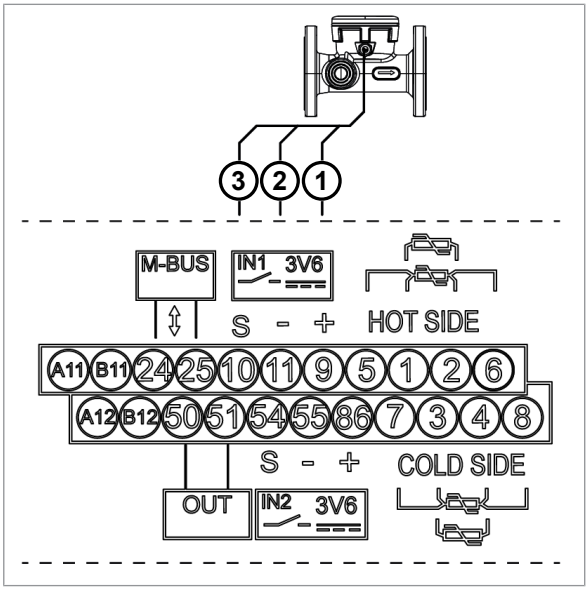

5.3.7 Connecting flow meters with a 24 V power supply

- Disconnect the CALEC® ST III from the power supply.
- Take off the front cover.
- Connect the green pulse/status output common cable (1) to terminal 11 (-).
- Connect the yellow pulse output cable (2) to terminal 10 (S).
- Connect the blue power supply cable (3) GND to terminal 65 (-).
- Connect the brown power supply cable (4) 24 VDC to terminal 64 (+).
- Close the front cover.

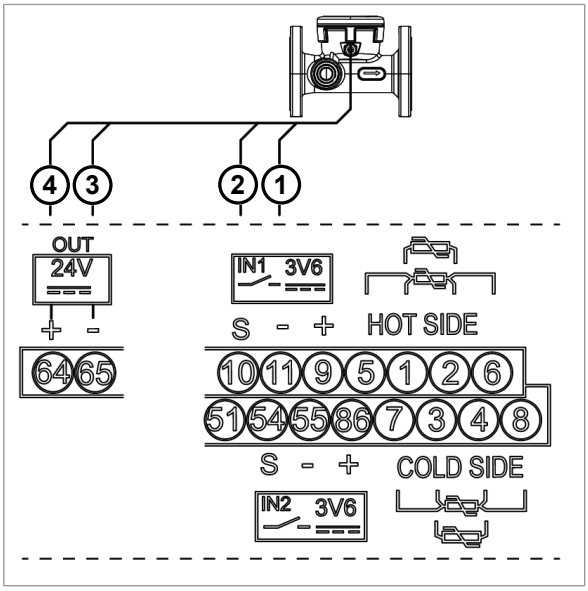

5.3.8 Connecting flow meters with a 24 V power supply and grounding

- Disconnect the CALEC® ST III from the power supply.
- Take off the front cover.
- Connect cable (1) to terminal 11 (-).
- Connect cable (2) to terminal 10 (S).
- Connect cable (3) to terminal 65 (-).
- Connect cable (4) to terminal 64 (+).
- Close the front cover.

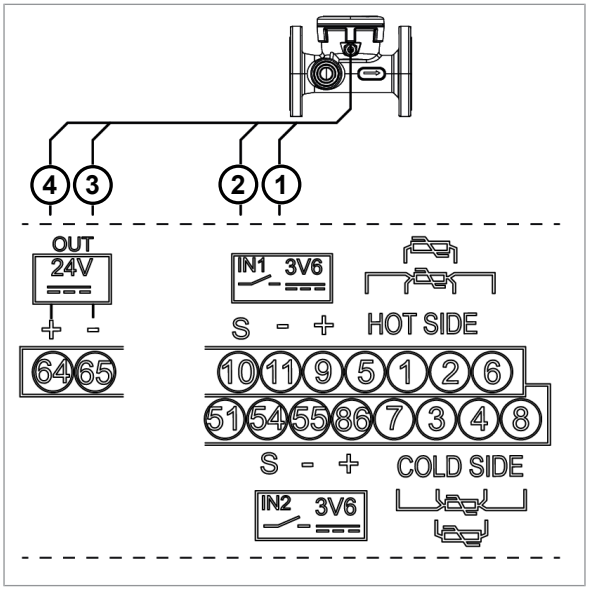

5.3.9 Connecting the digital output

- Disconnect the CALEC® ST III from the power supply.
- Take off the front cover.
- Connect the pulse output signals to terminal 50 and 51.
- Close the front cover.

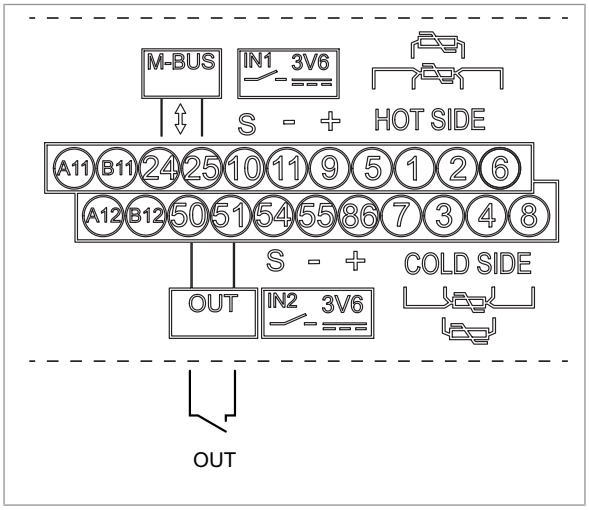

5.3.10 Connecting the M-Bus (wired and wireless)

CALEC® ST III is equipped with an M-Bus interface allowing radio remote reading and connection the M-Bus system.

Wired

- Disconnect the CALEC® ST III from the power supply.
- Take off the front cover.
- Connect M-Bus to terminals 24 and 25.
- Close the front cover.
- Apply voltage.

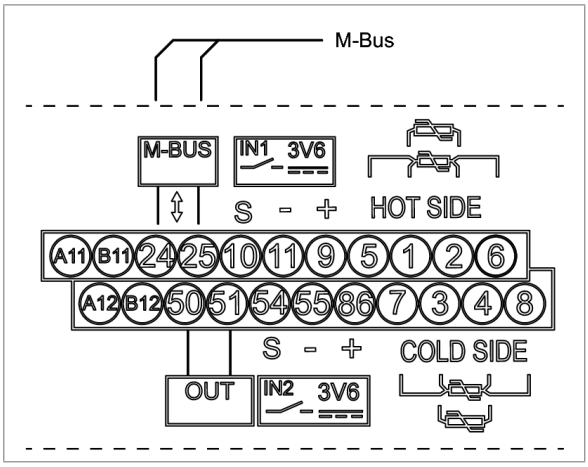

Wireless

Settings - SMA connector
• Wireless M-Bus (Conform to EN 13757-4)
• 868Mhz – T1 mode
• OMS Version 4.0
• OMS address including serial number of the device

NOTICE

Material damage due to operation without antenna

Operation without antenna or with a non-compliant antenna can cause damage to the product.

- Make sure, a compliant antenna is connected before operation.

- Disconnect the CALEC® ST III from the power supply.
- Take off the front cover.
- Connect the antenna (0 db gain, 50 Ω impedance) to the SMA socket.
- Tighten the antenna with max. 5 Nm.
- Close the front cover.
- Place the device at the position with the best reception.
- Supply voltage.

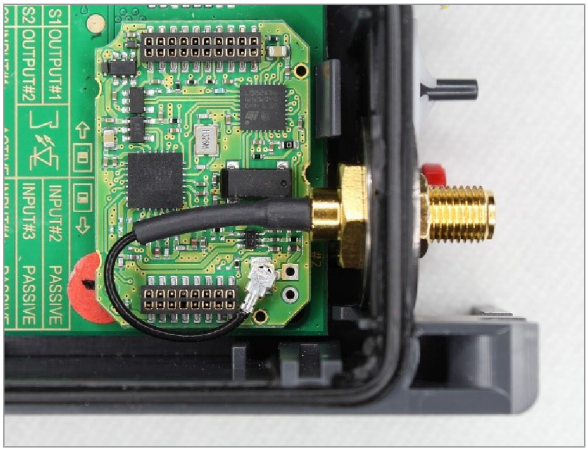

5.3.11 Connecting the communication modules

The CALEC® ST III Advanced offers six module slots to install up to six communication modules. Each module slot is connected to the terminals. Depending on which module slot is used, the communication module must be wired to the corresponding terminal numbers.

Module slot	Terminal (+) Channel #1	Terminal (-) Channel #1	Terminal (+) Channel #2 *	Terminal (-) Channel #2 *
#1	A11	B11	A12	B12
#2	A21	B21	A22	B22
#3	A51	B51	A52	B52
#4	A61	B61	A62	B62
#5	A71	B71	A72	B72
#6	A81	B81	A82	B82

* If a KNX daisy-chain module is used, it is always connected to channel 2.

M-Bus

Additional M-Bus modules can be inserted in the CALEC® ST III in order to duplicate network or to manage several data flow for different solutions.

Module #1: A11/B11 (Channel #1)	**Module #4: A61/B61 (Channel #1)**
Module #2: A21/B21 (Channel #1)	**Module #5: A71/B71 (Channel #1)**
Module #3: A51/B51 (Channel #1)	**Module #6: A81/B81 (Channel #1)**
The interface is electrically isolated	
The use of primary and secondary addresses is possible	
Setting the baud rate is possible	
Factory settings: Primary address: 0 Secondary address: serial number Baud rate: 2'400 Baud	

- Disconnect the CALEC® ST III from the power supply.
- Take off the front cover.
- Connect the M-Bus to the terminals corresponding to the used module slot. See Connecting the communication modules [▸p. 30] for details.
- Close the front cover.
- Apply voltage.

For the programming options to this module see M-Bus [▸p. 45].

Modbus RTU

Module #1: A11/B11 (Channel #1)	Module #4: A61/B61 (Channel #1)
Module #2: A21/B21 (Channel #1)	Module #5: A71/B71 (Channel #1)
Module #3: A51/B51 (Channel #1)	Module #6: A81/B81 (Channel #1)
The interface is electrically isolated.	
When installing CALEC® ST III at the end of the Modbus segment the internal termination resistor can be used.	
Factory settings: Modbus address: 1 Parity: Even Baud rate: 19'200 Baud	

- Disconnect the CALEC® ST III from the power supply.
- Take off the front cover.
- Connect the ModBus to the terminals corresponding to the used module slot. See Connecting the communication modules [▸p. 30] for details.
- Close the front cover.
- Apply voltage.

For the programming options to this module see Modbus [▸p. 45].

BACnet

Module #1: A11/B11 (Channel #1)	Module #4: A61/B61 (Channel #1)
Module #2: A21/B21 (Channel #1)	Module #5: A71/B71 (Channel #1)
Module #3: A51/B51 (Channel #1)	Module #6: A81/B81 (Channel #1)
The interface is electrically isolated.	
When installing CALEC® ST III at the end of the BACnet segment the internal termination resistor can be used.	
Factory settings: Manufacturer ID: 431 BACnet device profile: B-ASC BACnet MAC address: Last 2 digits of the serial number Device instance number: Last 5 digits of the serial number Mode: Master Baud rate: Automatic	

- Disconnect the CALEC® ST III from the power supply.
- Take off the front cover.
- Connect BACnet to the terminals corresponding to the used module slot. See Connecting the communication modules [▸p. 30] for details.
- Close the front cover.
- Apply voltage.

For the programming options to this module see BACnet [▸p. 46].

N2Open

Module #1: A11/B11 (Channel #1)	Module #4: A61/B61 (Channel #1)
Module #2: A21/B21 (Channel #1)	Module #5: A71/B71 (Channel #1)
Module #3: A51/B51 (Channel #1)	Module #6: A81/B81 (Channel #1)
The interface is electrically isolated.	
When installing CALEC® ST III at the end of the N2Open segment, the internal termination resistor can be used.	
Factory settings: N2Open address: 1 Baud rate: 9'600 Baud	

- Disconnect the CALEC® ST III from the power supply.
- Take off the front cover.
- Connect N2Open to the terminals corresponding to the used module slot. See Connecting the communication modules [▶p. 30] for details.
- Close the front cover.
- Apply voltage.

For the programming options to this module see N2-Bus [▶p. 45].

LON

Module #1: A11/B11 (Channel #1)	Module #4: A61/B61 (Channel #1)
Module #2: A21/B21 (Channel #1)	Module #5: A71/B71 (Channel #1)
Module #3: A51/B51 (Channel #1)	Module #6: A81/B81 (Channel #1)
The interface is electrically isolated.	
The service PIN and the Wink LED are available for identification on the LON network.	
The service LED provides information about the system condition.	
Possibly non-poled	

- Disconnect the CALEC® ST III from the power supply.
- Take off the front cover.
- Connect LON to the terminals corresponding to the used module slot. See Connecting the communication modules [▶p. 30] for details.
- Close the front cover.
- Apply voltage.

KNX

Module #1: A11/B11 (Channel #1) **Possible daisy chain wiring: A12/B12**	**Module #4: A61/B61 (Channel #1)** **Possible daisy chain wiring: A62/B62**
Module #2: A21/B21 (Channel #1) **Possible daisy chain wiring: A22/B22**	**Module #5: A71/B71 (Channel #1)** **Possible daisy chain wiring: A72/B72**
Module #3: A51/B51 (Channel #1) **Possible daisy chain wiring: A52/B52**	**Module #6: A81/B81 (Channel #1)** **Possible daisy chain wiring: A82/B82**
The interface is electrically isolated.	
Factory settings: Max. current consumption: 10 mA Baud rate: 9'600 Baud	

- Disconnect the CALEC® ST III from the power supply.
- Take off the front cover.
- Connect KNX to the terminals corresponding to the used module slot. See Connecting the communication modules [▶p. 30] for details.
- Close the front cover.
- Apply voltage.

LoRa

NOTICE

Material damage due to operation without antenna

Operation without antenna or with a non-compliant antenna can cause damage to the product.

- Make sure, a compliant antenna is connected before operation.

Module #2
Factory settings: Frequency: 868 MHz Gain:0 dB Impedance: 50 Ω Antenna connector: SMA connector Max. emitted power of antenna: 14 dBm

- Disconnect the CALEC® ST III from the power supply.
- Take off the front cover.
- Connect the antenna to the SMA socket. The antenna must comply with the LoRaWAN-standard (max. emitted power: 16 dB.
- Tighten the antenna with max. 5 Nm.
- Close the front cover.
- Place the device at the position with the best reception.
- Supply voltage.

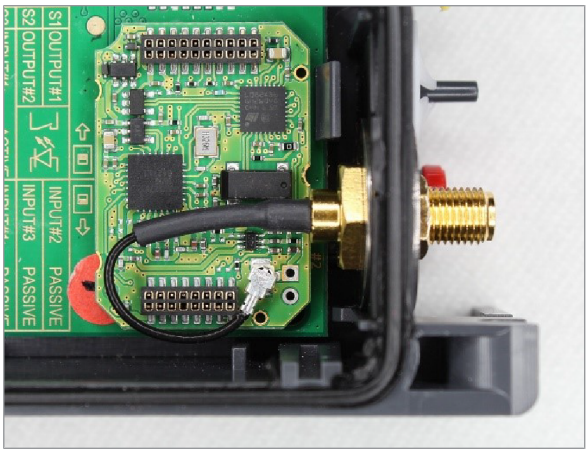

Analog output (active / passive)

Active wiring possible, auxiliary power 24VDC, terminals 74+75 & terminals 64+65, is available

CALEC® ST III can be equipped with up to four passive analogue outputs. An external power supply is required for operating purposes. The current per channel can be adjusted within a range of 0 – 20 mA or 4 – 20 mA. The following readings can be emitted as current signals:

Factor	Display
Temperature on “hot” side	t-hot
Temperature on “cold” side	t-cold
Temperature on difference	t-diff
Output	POUEr
Flow	FLOU
Mass flow	MAS-FLOU
C-factor	C-Factor
Density	dEnSitY

Limit-value signals

Digital output signals can be used to emit limit-value monitoring signals.

- Function of one-sided limit-value monitoring (Limit1)

If an adjustable maximum limit is exceeded or if the reading fails to reach an adjustable minimum, the output signal switches over, hysteresis (0 - 10 %) and control direction are selectable as required. While the excess-reading remains in force, the meter (showing “Cnt” for “counter”) calculates the total duration of the error for inspection purposes.

- Function of two-sided limit-value monitoring (Limit2)

If an adjustable maximum limit is exceeded and if there is failure to reach an adjustable minimum, the functions operate in a similar way to those of Limit1.

- Alarm message
- The microprocessor monitors the temperature sensor and internal functions, and displays any resulting error messages. This information can also be used to generate an alarm signal via the digital outputs.

Module #1: A11/B11 (Channel #1) Module #1: A12/B12 (Channel #2)	**Module #4: A61/B61 (Channel #1) Module #4: A62/B62 (Channel #2)**
Module #2: A21/B21 (Channel #1) Module #2: A22/B22 (Channel #2)	**Module #5: A71/B71 (Channel #1) Module #5: A72/B72 (Channel #2)**
Module #3: A51/B51 (Channel #1) Module #3: A52/B52 (Channel #2)	**Module #6: A81/B81 (Channel #1) Module #6: A82/B82 (Channel #2)**
The outputs are electrically isolated.	
Module specifications: Current range: 4...20 mA / 0...20 mA Supply voltage: 6...24 VDC Electronical isolation max.: 48 VDC Resistance ≤ 837 Ω / 24 VDC	

- ▶ Disconnect the CALEC® ST III from the power supply.
- ▶ Take off the front cover.
- ▶ Connect the passive analog signals to the terminals corresponding to the used module slot. See Connecting the communication modules [▶p. 30] for details.
- ▶ Close the front cover.
- ▶ Apply voltage.

For the programming options to this module see I-Out (active / passive) [▶p. 44].

Digital output

Additional 2DOU modules can be inserted in the CALEC® ST III to duplicate digital outputs to be connected to different solutions.

Module #1: A11/B11 (Channel #1) **Module #1: A12/B12 (Channel #2)**	**Module #4: A61/B61 (Channel #1)** **Module #4: A62/B62 (Channel #2)**
Module #2: A21/B21 (Channel #1) **Module #2: A22/B22 (Channel #2)**	**Module #5: A71/B71 (Channel #1)** **Module #5: A72/B72 (Channel #2)**
Module #3: A51/B51 (Channel #1) **Module #3: A52/B52 (Channel #2)**	**Module #6: A81/B81 (Channel #1)** **Module #6: A82/B82 (Channel #2)**

- Disconnect the CALEC® ST III from the power supply.
- Take off the front cover.
- Connect the Digital output to the terminals corresponding to the used module slot. See Connecting the communication modules [▶p. 30] for details.
- Close the front cover.
- Apply voltage.

For the programming options to this module see Outputs [▶p. 44].

5.3.12 Activating the backup battery

CALEC® ST III contains a button cell backup battery.

- Remove the plastic strip (1) from the battery compartment to activate the backup battery.

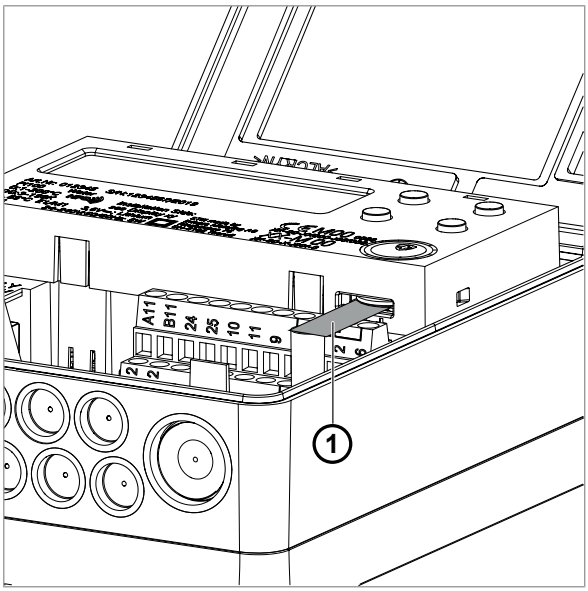

6 Operation

⚠ DANGER

Electric shock

Touching energized system parts can cause immediate death or serious injury.

- Make sure that installation work is only carried out by authorized specialists.
- Before carrying out any work on the system, disconnect the power supply and check that no voltage is present.
- If an insulation is damaged, disconnect the power supply immediately and arrange for immediate repair.

Only the operating steps required for a functional control are described in this manual.

- For more information see http://www.integra-metering.com.

6.1 Operating elements

1 LCD display
2 Keys panel
3 NFC interface

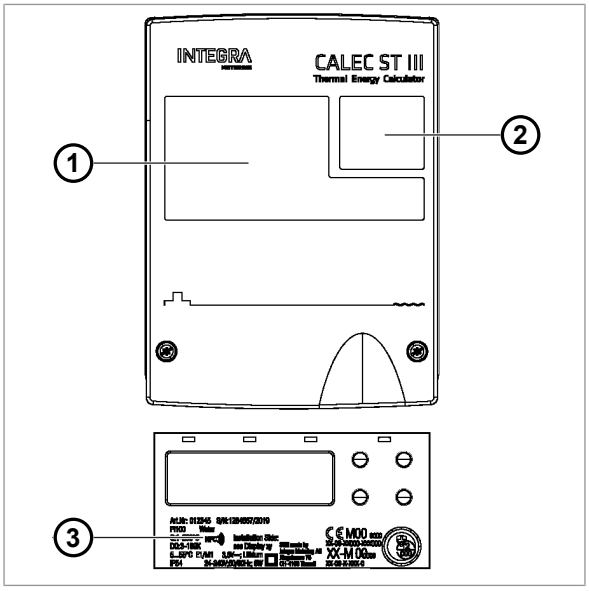

6.1.1 Display

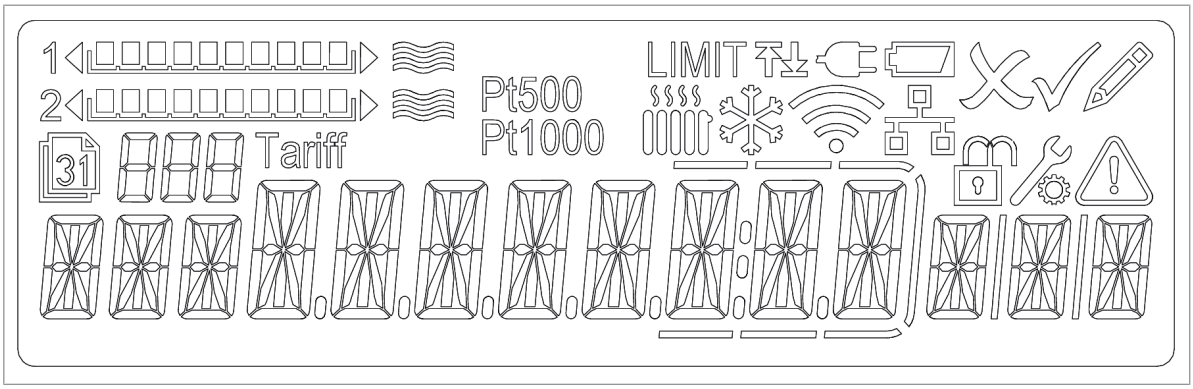

Heating circuit
Used when the device is BDE. Indicates that the power is ≥0.

Cooling circuit
Used when the device is BDE. Indicates that the power is <0.

External power supply OK
Indicates that the device is powered externally.

Low battery
Not used.

Edit – esc.
Not used.

Edit – OK
Not used.

Edit – mode
Indicates that the user is editing a value.

Memory value
Indicates that the user is in the Stich or Logger menu.

Wireless connected
Indicates that a bluetooth device is connected.

Wired connected
Indicates that LoRa is connected.

Lock
Closed: User mode
Open: Service mode

Programming mode
Indicates that the programming mode is activated.

Error / alarm present
Indicates that an alarm is present.

Flow display channel #1
Proportional bar graph from 0 to 200 Hz.

Flow display channel #2
Proportional bar graph from 0 to 200 Hz.

Limit value
Limit up: Indicates that a maximum value is displayed.
Limit down: Indicates that a minimum value is displayed.

Memory no. / channel no.
Displays the memory number.

Tariff
Not used

6.1.2 Buttons

1 **UP**
To scroll up or left in the operation matrix.
To increment a number which is in edit mode.

2 **DOWN**
To scroll down or right in the operation matrix.
To decrement a number which is in edit mode.

3 **ESC**
To exit an edited value or selection without changes.
Long-press: To jump to the home position of the operation matrix.
Press “Esc” of a counter value: Change to “High-Resolution” or back.

4 **ENTER**
To accept a value or selection which is in edit mode.
To select a menu in the operation matrix.

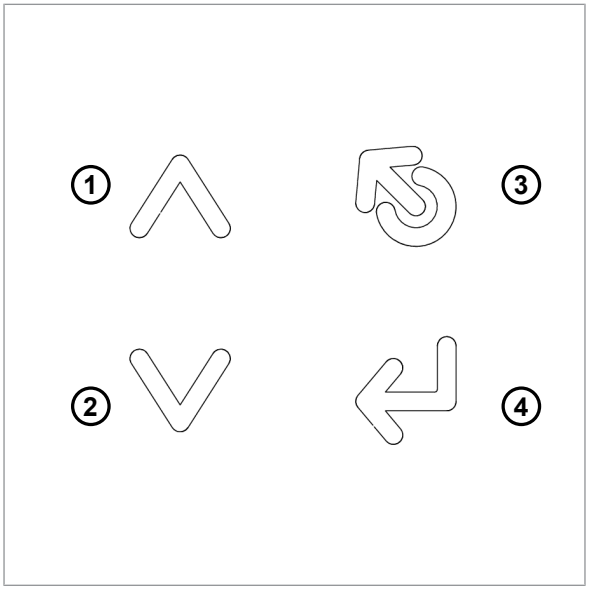

6.2 Switching on the meter

- Check the electrical connections in the CALEC box (1).
- Check the electrical connection in the extension box (2).
- Turn on the power supply.
- If required, fix alarm.
- Check the pulse value (Imp) of the flow meter.
- Check the installation side (Sid) of the flow meter.
- Fit and close the cover (3).
- Tighten two screws (4).
- Attach the safety caps (5) to each screw with the smooth side facing outwards.

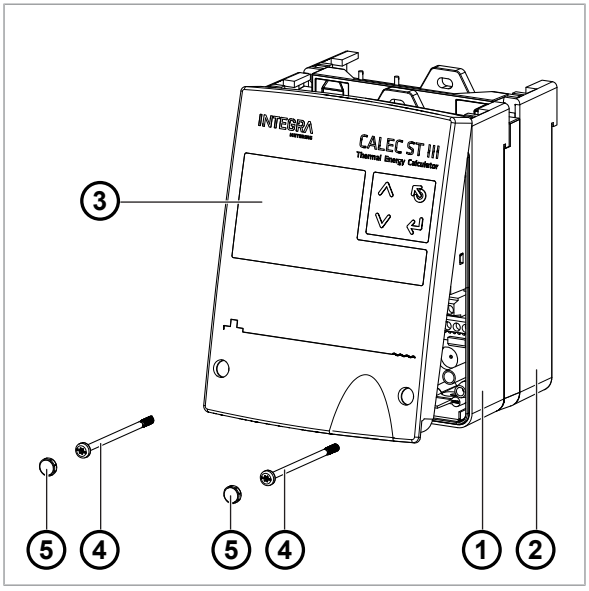

- Check the unit of the main input (set the auxiliary meter).
- Check the pulse value of the main input (set the auxiliary meter).
- Check date and time.
- Check that the flow indicator blinks if there is a flow.
- Check the current values during operation on their plausibility.
- Check the reset time of the display.
- Set the filter settings for current values of Q and P.

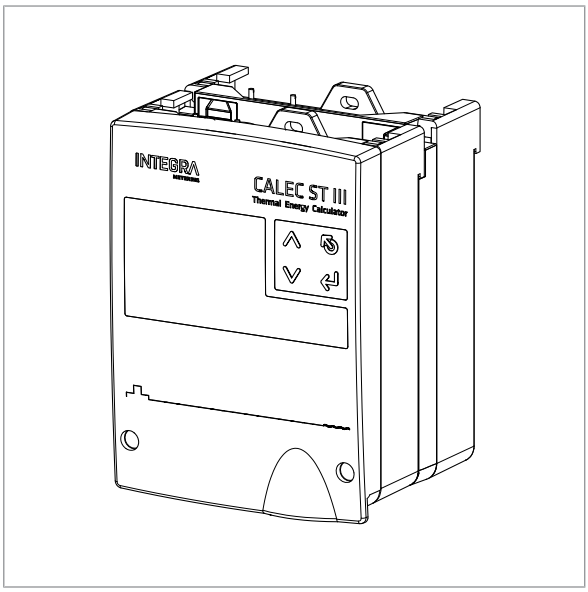

6.3 Navigating through the menus

- Press the **UP** and **DOWN** keys to step through the main menu entries.
- Press **ENTER** to enter a sub-menu.
- Press the **UP** and **DOWN** keys to step through the sub-menu entries.
- Press **ESC** to exit from any menu or sub-menu.

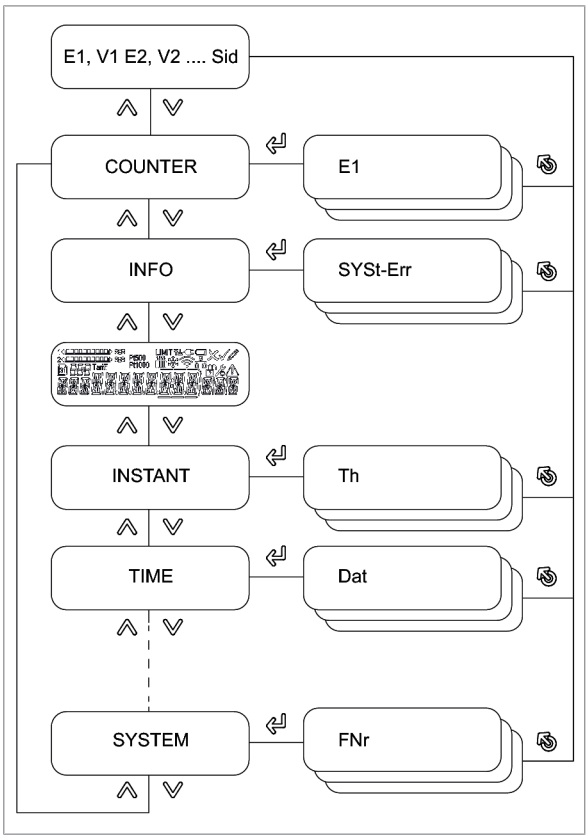

6.4 Editing parameter values

- Navigate to the parameter to be edited (e.g. time).
- Press **ENTER**.
  - The edit mode is active and the value / digit to be edited blinks.
- Press the **UP** and **DOWN** key to edit the value.
- Press **ENTER** to confirm the value.
- Press **ESC** to exit the menu.

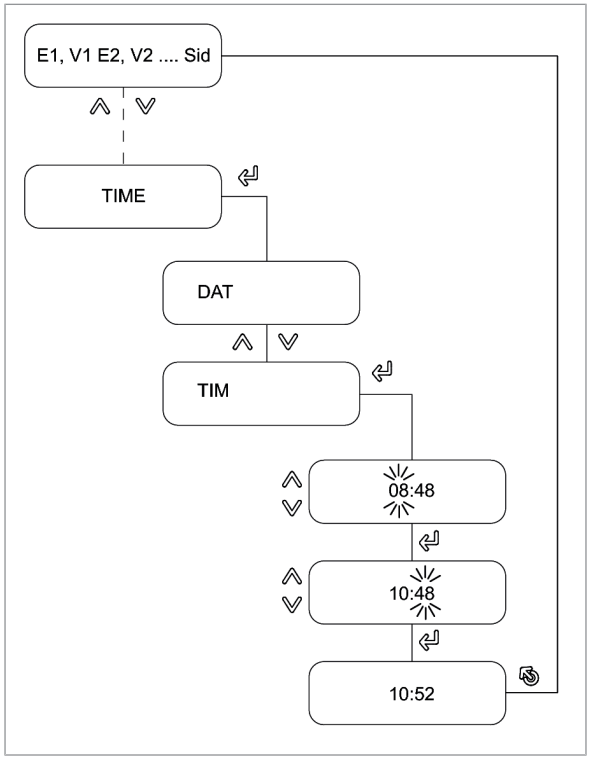

6.5 Entering the service mode

- Press the **DOWN** key until «CONFIG» is displayed.
- Press **ENTER** to enter the «CONFIG» sub-menu.
- Press **ENTER**.
- Enter the service code «00001111».
  - The service mode is unlocked and data can be edited.

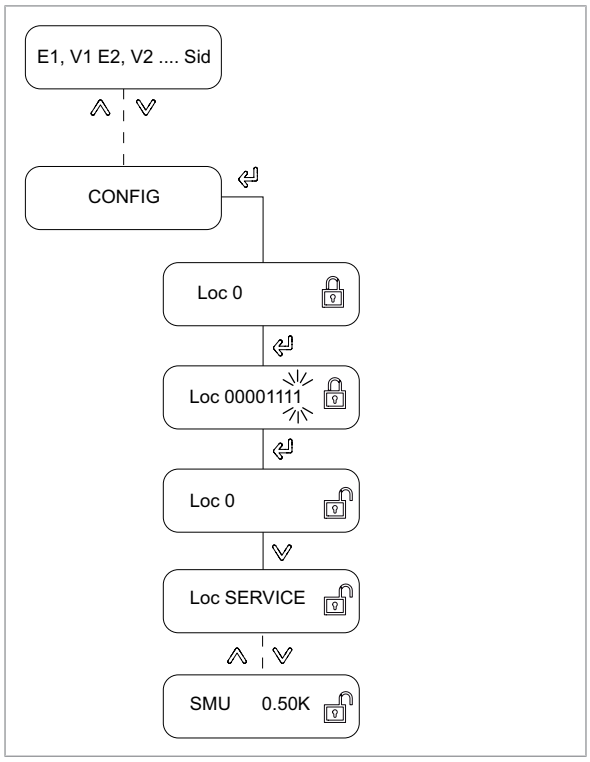

6.6 Menu structure

6.6.1 Counter

The depiction of fields in the menu structure depends on the respective options.

Display	Meaning	Visible	Editable
E1	Energy meter reading	According to calculator function	Programming mode
V1	Volume meter reading	According to calculator function	Programming mode
M1	Mass meter reading (optional)	According to calculator function	Programming mode
E2	Energy meter 2 reading (optional BDE/TGR)	According to calculator function	Programming mode
V2	Volume meter 2 reading (optional BDE)	According to calculator function	Programming mode
M2	Mass meter 2 reading	According to calculator function	Programming mode
E3	Energy meter 3 reading (optional TGR)	According to calculator function	Programming mode
R1	Tariff 1	Only tariff 8	Programming mode
R2	Tariff 2	Only tariff 8	Programming mode
R3	Tariff 3	Only tariff 8	Programming mode
R4	Tariff 4	Only tariff 8	Programming mode
R5	Tariff 5	Only tariff 8	Programming mode
R6	Tariff 6	Only tariff 8	Programming mode
R7	Tariff 7	Only tariff 8	Programming mode
R8	Tariff 8	Only tariff 8	Programming mode
H1	Auxiliary counter 1 reading (optional flow)	According to calculator function	Service mode
H2	Auxiliary counter 2 reading	According to calculator function	Service mode
Imp	Pulse value of flow meter	According to calculator function	No
Sid	Installation side of flow meter	According to calculator function	No

6.6.2 Info

This menu is only visible if an error is present. It displays the type of error as described in the table.

Display	Meaning
SYSt-Err	Error system
U-Err	Error supply
th-Error	Error temperature sensor hot side
tc-Error	Error temperature sensor cold side
MEM-Err	Error of internal memory EEPROM
OPT-Err	Error on one of the option modules (HW)
th-ALArM	Temperature on hot side outside the permitted range
tc-ALArM	Temperature on cold side outside the permitted range
dt-ALArM	Temperature difference outside the permitted range
Ext-AL	External alarm
AP-Err	Communication problem between main board and calculator
SEAL-Err	MID seal broken

6.6.3 Test

This menu is available for LCD test purposes.

6.6.4 Instant

Display	Meaning	Visible	Editable
Th	Current temperature hot side (for cooling = return flow)	According to calculator function	No
Tc	Current temperature cold side (for cooling = forward flow)	According to calculator function	No
dT	Temperature difference	According to calculator function	No
P1	Performance	According to calculator function	No
Qv1	Flow	According to calculator function	No
Qm1	Mass flow	According to calculator function	No
KF	Specific heat factor	According to calculator function	No
DEN	Density	According to calculator function	No
P2	Performance 2	According to calculator function	No
Qv2	Flow 2	According to calculator function	No
Qm2	Mass flow 2	According to calculator function	No

6.6.5 Time

Display	Meaning	Visible	Editable
DAT	Date	Yes	Service mode
TIM	Time	Yes	Service mode
DAY	Day	Yes	No
SEA	Winter /summer time activation (off / auto)	Yes	Service mode
SEA	Winter / summer time	Yes	Service mode
HR	Operating hours	Yes	Programming mode
AL	Hours of alarm	Yes	Programming mode
Err	Hours of error	Yes	Programming mode
Pb	Calibration year	Field is only visible if device is calibrated.	No
Marke	Information about the calibration company	Field is only visible if device is calibrated.	No

6.6.6 Stich

Display	Meaning	Visible	Editable
Nr	Billing date number 1- 12	Yes	Yes for selection
St	Billing date 1- 12	Yes	Service mode
DAT	Saving date	Yes	No
E1	Energy meter reading	According to calculator function	No
V1	Volume meter reading	According to calculator function	No
M1	Mass meter reading	According to calculator function	No
E2	Energy meter reading 2 in options BDE / BDV	According to calculator function	No
V2	Volume meter reading 2 in options BDE / BDV	According to calculator function	No

Display	Meaning	Visible	Editable
M2	Mass meter reading 2 in options BDE / BDV	According to calculator function	No
E3	Energy meter reading 3 in option TGR	According to calculator function	No
H1	Auxiliary meters reading 1 in option Flow	According to calculator function	No
H2	Auxiliary meters reading 2	According to calculator function	No
Hr	Hours	Yes	No
AL	Alarm hours	Yes	No
Err	Error hours	Yes	No

6.6.7 Logger

Display	Meaning	Visible	Editable
Nr	Logger number (1...500)	Yes	Yes for selection
Per	Memory interval	Yes	Service mode
DAT	Saving date	Yes	No
TIM	Saving time	Yes	No
E1	Energy meter reading	According to calculator function	No
V1	Volume meter reading	According to calculator function	No
M1	Mass meter reading	According to calculator function	No
E2	Energy meter reading 2 in options BDE / BDV	According to calculator function	No
V2	Volume meter reading 2 in options BDE / BDV	According to calculator function	No
M2	Mass meter reading 2 in options BDE / BDV	According to calculator function	No
E3	Energy meter reading 3 in option TGR	According to calculator function	No
H1	Auxiliary meters reading 1, in option Flow	According to calculator function	No
H2	Auxiliary meters reading 2	According to calculator function	No
Hr	Operating Hour counter	Yes	No
AL	Alarms Hour counter	Yes	No
Err	Error hours counter	Yes	No
DPm	Date of maximum period	Yes	No
TPm	Time of maximum period	According to calculator function	No
Pm	Maximum power	According to calculator function	No
Qvm	Volume flow of TimePoint of max. power	According to calculator function	No
Qmm	Mass flow of TimePoint of max. power	According to calculator function	No
Thm	Temperature hot side of TimePoint of max. power	According to calculator function	No
Tcm	Temperature cold side of TimePoint of max. power	According to calculator function	No

6.6.8 Inputs

Display	Meaning	Visible	Editable
Nr	Input number (1...2)	Yes	Yes for selection

Display	Meaning	Visible	Editable
Fct	Function	Yes	No
ImP	Pulse value of the input pulses	According to calculator function	Programming mode
Sid	Installation side of the flow meter	According to calculator function	Programming mode
MAX	Maximum input frequency	According to calculator function	Programming mode
STA	Actual status	Yes	No
MAX	Upper limit for th / tc alarm	Yes	No
MIN	Lower limit for th / tc alarm	Yes	No
Nr (Ref)	Temperature point for tariff 8 (1...7)	Only tariff 8	User mode
Ref	Threshold for return temperature in option TGR Overstepping: register E2 Undercutting: register E3	According to calculator function	Programming mode
Fct (Ref)	Temperature used for reference	Only tariff 8	Service mode

6.6.9 Outputs

This menu is only available if the output hardware module is installed in the device.

Display	Meaning	Visible	Editable
Nr	Output number	Yes	Yes
Fct	Output function	Yes	Service mode
SIG	Signal type of the output (A)	Depends on the output function Fct	Service mode
IMP	Pulse value for the function of the output (A)	Depends on output function Fct	Service mode
SIG	(B, C)	Depends on output function	Service mode
GW1	Limit value 1 (B, C)	Depends on output function	Service mode
GW2	Limit value 2 (C)	Depends on output function	Service mode
HYS	Hysteresis of the output (B, C)	Depends on output function	Service mode
CNT	Pulse counter / seconds overstepped (A, B, C, D, E)	Depends on output function	Service mode
ACT	Effective direction of the output (B, C, D, E, F)	Depends on output function	Service mode
STA	Actual status (A, B, C, D, E)	Depends on output function	Yes
STA	Actual status (F)	Depends on output function	Service mode

6.6.10 I-Out (active / passive)

This menu is only available if the I-OUT analog (active / passive) hardware module is installed in the device.

Display	Meaning	Visible	Editable
Nr	Output number (1...4)	Yes	Yes for selection
Fct	Output function	Yes	Service mode
SIG	Type of analogue output (A, B)	Depends on output function	Service mode
0/4	Value at 0 mA or 4mA (A, B)	Depends on output function	Service mode
20	Value at 20 mA (A, B)	Depends on output function	Service mode

Display	Meaning	Visible	Editable
do	Simulation mA value (C)	Depends on output function	Service mode
Err	Current output in case of error (A, B)	Depends on output function	Service mode
STA	Current value (A, B)	Depends on output function	Yes

6.6.11 Units

Display	Meaning	Visible	Editable
Eu	Energy unit	Yes	Programming mode
Ed	Number of decimal places for energy unit	Yes	Programming mode
V	Unit and number of decimal places for volumes unit	Yes	Programming mode
M	Number of decimal places for mass unit	Yes	Programming mode
P	Power unit	Yes	Service mode
Q	Volume flow unit	Yes	Service mode
T	Temperature unit	Yes	Service mode
EP	Pulse value for energy pulse output	Yes	Service mode
VP	Pulse value for volume pulse output	Yes	Service mode
MP	Pulse value for mass unit	Yes	Service mode

6.6.12 M-Bus

Display	Meaning	Visible	Editable
Nr	M-Bus connection • Onboard • Sockets 1 to 6 • RS485-1 • RS485-2	Yes	Yes for selection
Adr	Primary M-Bus address	Yes	Service mode
SEK	Secondary M-Bus address	Yes	Service mode
BAU	Baud rate	Yes	Service mode
Acc	Meter reading prompt	Yes	Yes
APP	M-Bus application reset	Yes	Service mode

6.6.13 Modbus

This menu is only available if the Modbus hardware module is installed in the device.

Display	Meaning	Visible	Editable
Nr	Number of Modbus	Yes	Yes for selection
Adr	Address of Modbus	Yes	Service mode
BAU	Baud rate	Yes	Service mode
Par	Parity	Yes	Service mode
Trm	Turn termination resistor on / off	Yes	Service mode

6.6.14 N2-Bus

This menu is only available if the N2Open hardware module is installed in the device.

Display	Meaning	Visible	Editable
Nr	Number of N2Open	Yes	Yes
Adr	Address of N2Open	Yes	Service mode
TRM	Turn termination resistor on / off	Yes	Service mode

6.6.15 BACnet

This menu is only available if the BACnet hardware module is installed in the device.

Display	Meaning	Visible	Editable
Nr	Number of BACnet	Yes	Yes
Adr	Address of BACnet	Yes	Service mode
Mod	Mode (master / slave)	Yes	Service mode
DIN	BAcnet device instance number	Yes	Service mode
Trm	Turn termination resistor on / off	Yes	Service mode

6.6.16 LON

On the CALEC ST® III, no specific menu is available for the LON hardware. All parameters are set directly through the protocol interface itself.

6.6.17 KNX

On the CALEC® ST III, no specific menu is available for the KNX hardware. All parameters are set directly through the protocol interface itself.

6.6.18 wMBus

Display	Meaning	Visible	Editable
InT	Interval (16 – 60 s)	Yes	Service mode
PS	Transmission power	Yes	No
SET	wMBus mode	Yes	Service mode
FW	Firmware version of wMBus module	Yes	No

6.6.19 LoRa

This menu is only available if the LoRa hardware module is installed in the device.

Display	Meaning	Visible	Editable
InT	Interval of transmission (in minutes)	Yes	Service mode
AT	Type of application (OTAA, ABP)	Yes	Service mode
SET	Selection of type of frame (data package det number)	Yes	Service mode
CFM	Selection of the frame structure	Yes	Service mode
WAN	Lora Wan version	Yes	No
FW	Firmware version	Yes	No

6.6.20 Config

This menu is only visible if the “Service Mode” is entered and validated. If you do not validate, you will only get a temporary access for 1 minute.

Display	Meaning	Visible	Editable
Loc	Safety key	Yes	Yes
Loc	Safety user level	Yes	Service mode
TYP	Type of temperature sensor	Yes	Service mode
MED	Type of glycol mixture (option GLY)	Yes, if option GLY is set	Service mode
CON	Concentration in % of the glycol mixture (option GLY)	Yes, if option GLY is set	Service mode
SMU	Creeping quantity suppression	Yes	Service mode
Rem	Remanence time for the actual flow (keeping time of display)	Yes	Service mode
dpQ	Damping factor for actual performance / flow value	Yes	Service mode
dPt	Damping factor for actual temperature value	Yes	Service mode
RES	Reset counter, alarm, logger and other values	Yes	Service mode
dt-	Limit value for display of dT-shortfall	Yes	Service mode
dtc	Automatic sensor adjustment	Yes	Programming mode
MLP	Max. logger averaging period	Yes	Service mode

6.6.21 System

Display	Meaning	Visible	Editable
FNr	Serial number	Yes	No
SYS	Calculator function	Yes	No
DAT	Manufacturing date	Yes	No
RW	Firmware version of calculator	Yes	No
FW	Firmware version of main board	Yes	No
HW	Hardware version	Yes	No
CS	Checksum of firmware	Yes	No

6.6.22 Init

One-time on-site setting of the calibration-relevant input values “IMP EBS“

- Assure that with the selected unit the accumulative energy amount can be handled without counter overflow.

This mode can be set once on site (activation by zeroing the pulse value).

Display	Meaning	Visible	Editable
Init	Allows the one-time setting of the values ImP / Sid / Eu / Ed / V during commissioning on site	Editable only in edit mode	Init
Go	Confirms the one-time setting at commissioning	Editable only in edit mode	Go

6.7 Commissioning

Depending on the required data output and the installed communication modules, a number of parameters have to be set.

The adjustable values are assigned to three safety levels:

Safety level	Access	Level Code
User mode	When the housing is closed the freely accessible data can be displayed by using the keys.	
Service mode	Can be activated with the service key while the cover is open. Allows the setting of all parameters that are not required to be calibrated for commissioning and the display of all set-tings.	1111

- Select the service mode [▶p. 40].
- Select the menu for the required data output [▶p. 39].
- Set the required parameters [▶p. 40].

6.7.1 Smart Phone commissioning

The CALEC® ST III device features an NFC (near field communication). The NFC can be used for commission-ing in a different way compared to using the display and buttons.

Smart Phone commissioning	
Operating system	Android and iOS; available on Google Play Store and on App Store
App	IM Connect+®
Features	Commissioning and readout via NFC and Bluetooth interface for better usability

Commisioning via NFC

- Scan the QR code to download the IM Connect+® to a compatible device.
- Start the IM Connect+®.
- In IM Connect+®, click **Scan device**.
- Put the device on the NFC area of the CALEC® ST III.
  - ▷ The CALEC® ST III will be detected automatically and communication via Bluetooth is activated.
- Remove the device from the CALEC® ST III.
- In IM Connect+®, set all parameters as required.
- Click **Quit** to terminate Bluetooth communica-tion.
  - ▷ The CALEC® ST III is again protected against un-intentional operation.

GET IT ON Google Play

GET IT ON THE App Store

Data security measures

The Bluetooth communication is activated only after an NFC authentication.

After completing the configuration of the CALEC STIII, the Bluetooth communication is disabled.

6.8 Additional functions

6.8.1 Billing date values

With the 12 freely programmable billing date values, the indexes can be memorized (e.g. monthly) for defined dates and consulted at any time [▶p. 42].

6.8.2 Data logging

The CALEC® ST III can record up to 500 data records in a ring buffer at intervals of minutes, hours, days, weeks, months [▶p. 43].

6.8.3 Simultaneous readout

In a plant with many meters, a considerable time difference between readings can occur if these are read out sequentially. CALEC® ST III avoids this problem with the "Freeze" command. A broadcast command instructs all meters simultaneously to store the required value after which they can be read out sequentially.

6.8.4 Low-flow OFF function

The system is factory-adjusted to carry out an energy calculation as soon as a temperature difference of >0 (when measuring heat) or <0 (when measuring cold) is detected. If, for example, a circulation conduit carries large quantities of heat transfer medium with a very low temperature difference over a long period of time, this can lead to significant reading errors in temperature measurement. The so-called "low flow OFF function" can be activated to avoid this, ensuring that energy is only detected when a pre-defined temperature difference is exceeded.

6.8.5 Energy metering in heating / cooling systems

The "bi-directional energy metering" (BDE) option allows emitted energy to be metered even in twin-conduit networks that perform a combined heating and cooling function. The measurement readings for heating and cooling are recorded separately for their corresponding cost-calculation purposes.

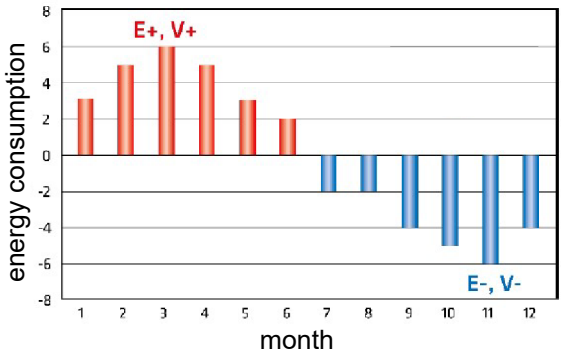

6.8.6 Recording of „heat return"

The „Tariff Return Limit" (TGR) option can be used to set a limit for the return temperature of the heat quantity. If this limit is exceeded, the flow is „returned" to the supply network and thus reduces efficiency.

6.8.7 Heat carriers with frost protection additives

The below-freezing temperatures involved in running a refrigeration plant require the use of additional frost protection. This poses an insurmountable problem for many conventional heat meters, as has been investigated in detail in such publications as PTB Report PTB- ThEx-24 of June 2002.

The "Glycol-based heat transfer medium" option available with CALEC® ST III ensures that metering is accurate even in these situations, as energy and volume can be calculated with a sliding scale of values for density and heating capacity for each temperature, independently of that temperature. CALEC® ST III gives accurately polynomial readings for the physical characteristics of 11 widely used heat transfer liquids with respect to concentration and temperature.

Only the heat transfer medium and concentration are established at start-up:

Medium[4]	Display	Concentration	Temperature range	Manufacturer	Type	Application / observation
Antifrogen N	AntifroN	20-60%	-120°C[1]	Clariant	E[2]	Confirms to DIN 4757-1; toxicity class 4. For cooling, solar, heating and heat pump systems. Low viscosity.
Antifrogen L	AntifroL	20-60%	-120°C[1]	Clariant	P[3]	Not harmful to health. For pharma sector, food use.
Tyfocor	Tyfocor	20-60%	-120°C[1]	Tyfocor	E	See type E
Tyfocor-L	Tyfocor	20-60%	-120°C[1]	Tyfocor	L	See type P
DowCal 10	DOUCAL10	30-70%	10-120°C[1]	Dow	E	See type E
DowCal	DOUCAL20	30-70%	20-120°C[1]	Dow	P	See type P
Glythermin P44	GLYTHP44	40-80%	-100°C[1]	BASF	P	FDA-approved in USA. Corrosion protection less effective. For pharma sector and food production plats
Temper -10	TEMPER10	100% fix	-10...150°C	Temper	S	Ready-to-use saline solution. Not harmful to health. For pharma and food sectors. Biodegradable, water-protection class 1. Low viscosity. High heat-transfer capacity.
Temper -20	TEMPER20	100% fix	-20...150°C	Temper	S	
Temper -30	TEMPER30	100% fix	-30...150°C	Temper	S	
Temper -40	TEMPER40	100% fix	-40...150°C	Temper	S	
Additional product are available on request.						

[1] Minimum temperature depends on concentration -40 to 0°C

[2] Based on ethylene glycol

[3] Based on propylene glycol

[4] All names are registered trademarks of their respective manufacturers.

6.8.8 Solar-powered thermal systems

Solar thermal systems likewise pose demanding tasks for energy metering with respect to temperature range and heat transfer medium.

The "Glycol-based heat transfer medium" (GLY) option available with CALEC® ST III also offers an excellent solution in these cases.

6.8.9 CALEC® ST III Flow

The CALEC® ST III Flow configuration is designed for flow-rate measurement purposes. Temperature measurement (hot and cold side) is disabled in this configuration, i.e. no temperatures are detected or displayed. CALEC® ST III Flow uses the accumulated pulse signals from the flow meter to calculate the current flow rate reading. These measurement readings can be sent to the display, the analog outputs and / or the M-Bus, Modbus, LON, BACnet, N2Open or KNX, Wireless M-Bus or Wireless LoRa interface for reading or further processing.

7 Maintenance

7.1 Calibration

Devices in commercial use:

- All calibration-relevant functions are located on the pluggable calculator module.
- Device-specific settings are stored redundantly in the lower housing part.
- Disassembling the lower housing part with field wiring is not required for calibration.

▶ Perform a periodic recalibration according to national calibration law.

▶ Exchange the calculator [▶p. 52] for calibration.

▶ Reset the meter readings of the new calculator to 0 in case of processing after calibration.

8 Service and repairs

⚠ DANGER

Electric shock

Touching energized system parts can cause immediate death or serious injury.

- ▶ Make sure that installation work is only carried out by authorized specialists.
- ▶ Before carrying out any work on the system, disconnect the power supply and check that no voltage is present.
- ▶ If an insulation is damaged, disconnect the power supply immediately and arrange for immediate repair.

8.1 Exchanging the calculator

- ▶ Disconnect CALEC® ST III from the power supply.
- ▶ Take off the front cover.
- ▶ Pull the calculator (1) to the front to remove.
  - ▷ The calculator (1) can be shipped for calibration.
- ▶ Plug the new calculator (1).
  - ▷ The new calculator automatically updates itself after plugging it in.

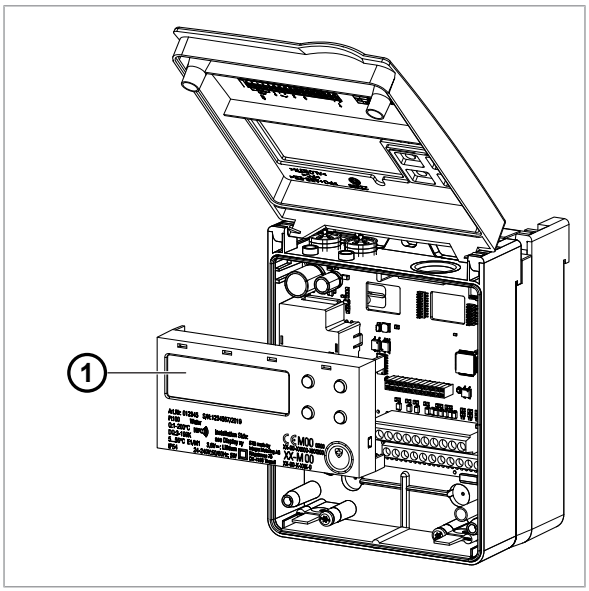

8.2 Troubleshooting

If a fault occurs, the message «ALARM» will appear on the display.

- The display flashes red to indicate the alarm message.
- The short message in the information loop gives details of the reason for the fault/alarm.

Message	Error/ alarm	Possible cause	Corrective measures
th-ERROR	Temperature error on hot side, no measurement possible	• Sensor connected incorrectly • Interruption/short circuit in sensor cables	▶ Check wiring. ▶ Check disconnected sensor wires with ohm meter. ▶ Check the input with a resistor: Pt 100: 100-150 Ω Pt 500: 500-620 Ω
tc-ERROR	Temperature error on cold side, no measurement possible		
SYSt-Error	EEPROM memory error	• Component error • Device error • Analog-Digital-Converter not working	▶ Send the device to be checked.

Message	Error/ alarm	Possible cause	Corrective measures
th-ALArM	Temperature on the hot side is outside the permitted measuring range	• Temperature of the heat cycle is too high • Temperature of the heat cycle is too low	▶ Check the current temperature in the InStAnt submenu.
tc-ALArM	Temperature on the cold side is outside the permitted measuring range		
dt-ALArM	Temperature difference is outside the permitted measuring range	• Temperature difference in the heat cycle is too large • Temperature difference in the heat cycle is negative • Sensor problem	▶ Check the current temperature difference in the InStAnt submenu.
MEM-Err	Memory error, EEPROM not working	• Faulty EEPROM memory	▶ Reset the device.
OPT-Err	Wrong implementation of options (slots)	• Incompatible combinations	▶ Adjust settings.
Ext-AL	External alarm from another device	• An alarm is displayed from another connected device	▶ Check the associated device.
AP-Err	System error between calculator and main board	• Incorrect mounting of main board and calculator	▶ Check the calculator. ▶ Check the main board. ▶ Restart the system.
SEAL-Err	Broken seal	• Device is in programming mode	▶ Reset the device. ▷ Sealing is lost. ▷ Calibration is lost.

9 Decommissioning / storage / disposal

9.1 Decommissioning

- Disconnect the device from all sources of energy.
- Remove the device from the system.

9.2 Storage

- Decommissioning according to chapter Decommissioning [▶p. 54].
- Select a suitable storage location.

9.3 Disposal

INTEGRA products must be disposed of in accordance with applicable local regulations. Improper disposal can have harmful effects on the environment and health.

- Decommissioning according to chapter Decommissioning [▶p. 54].
- Remove the button cell battery (1) from the product.
- Disassemble the product, sort according to material and dispose of the materials in accordance with applicable local regulations.
- For details contact Integra Metering and ask for «End of Life» document.

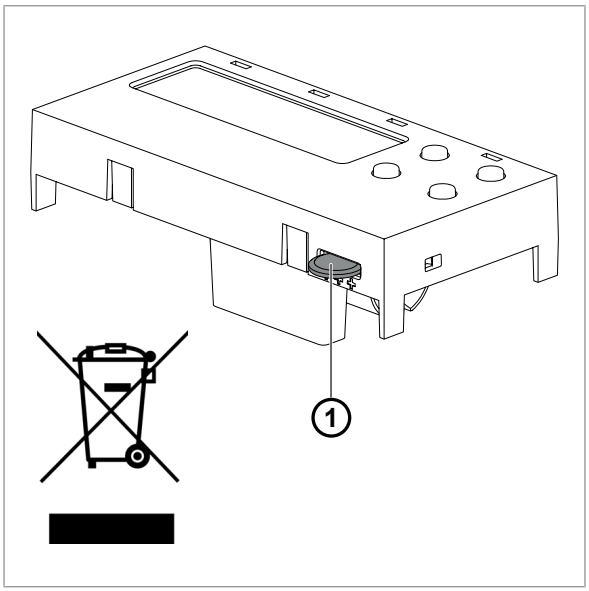

Appendix

Drilling template

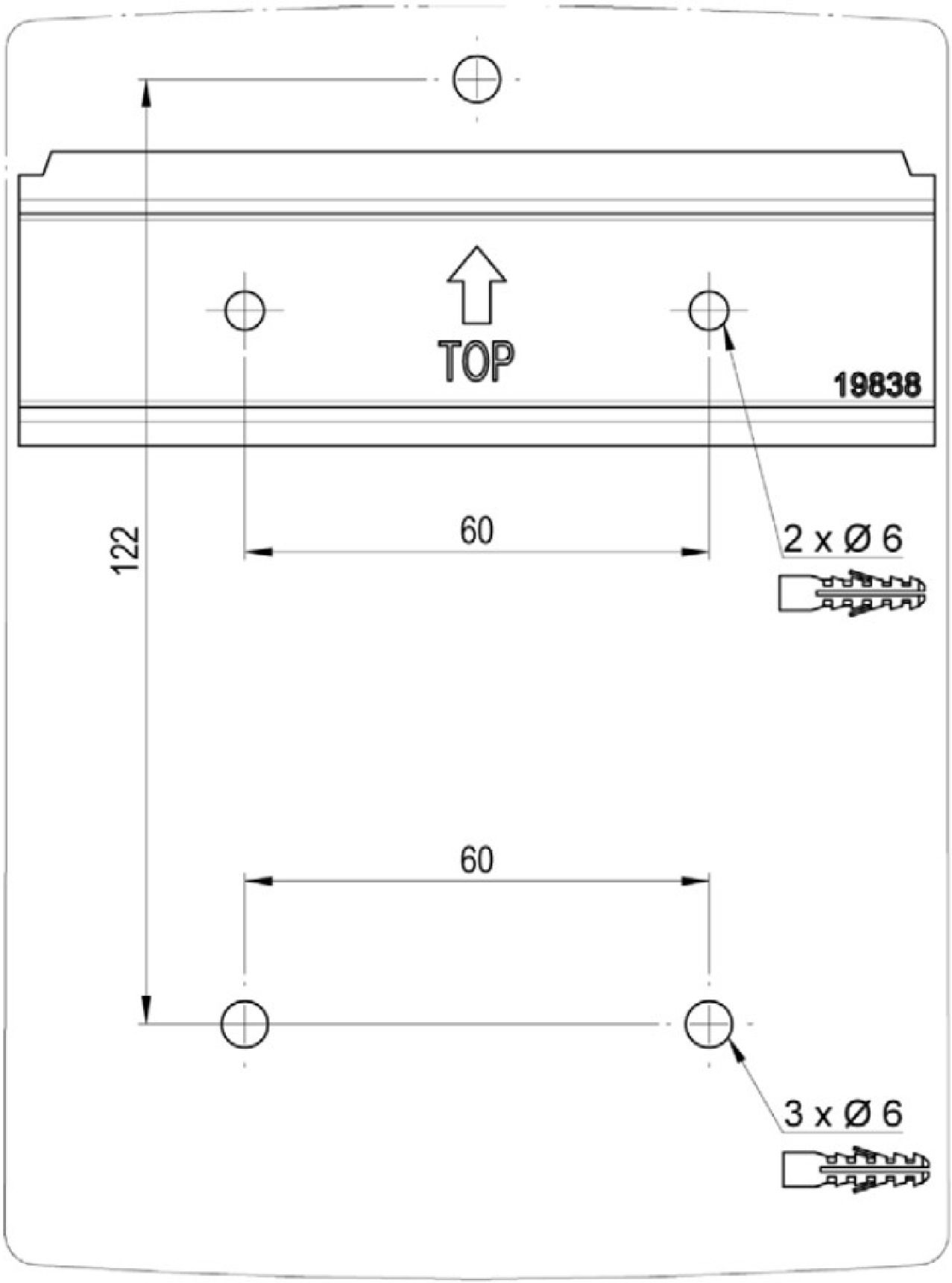

INTEGRA METERING

Your service partner